EVERSTAR
The Brightest LED

# DATA SHEET

## ES-XX-XQ003-0350-XXXXX

# ES-XX-XQ003-0350-XXXXX Datasheet

Our product has excelllent reliability & high quality.

Everstar COB series covers a wide range of luminous flux.

The element arrangement of LED package is capable of utilizing light more effectively with higher performance. This Product come in two LES dimensions 7.5mm & 11.2mm



## FEATURES

- High color quality, high flux, high - efficacy -
- Low thermal resistance
- Long lifetime
- Easy for assemble
- RoHS compliant
- Available white chromaticity bins form ANSI

## APPLICATIONS

- LED bulb lights
- LED spot lights
- LED recessed lights
- LED miner lights
- Commercial lighting,
- Domestic lighting
- and museum lighting.

## Mechanical Dimensions

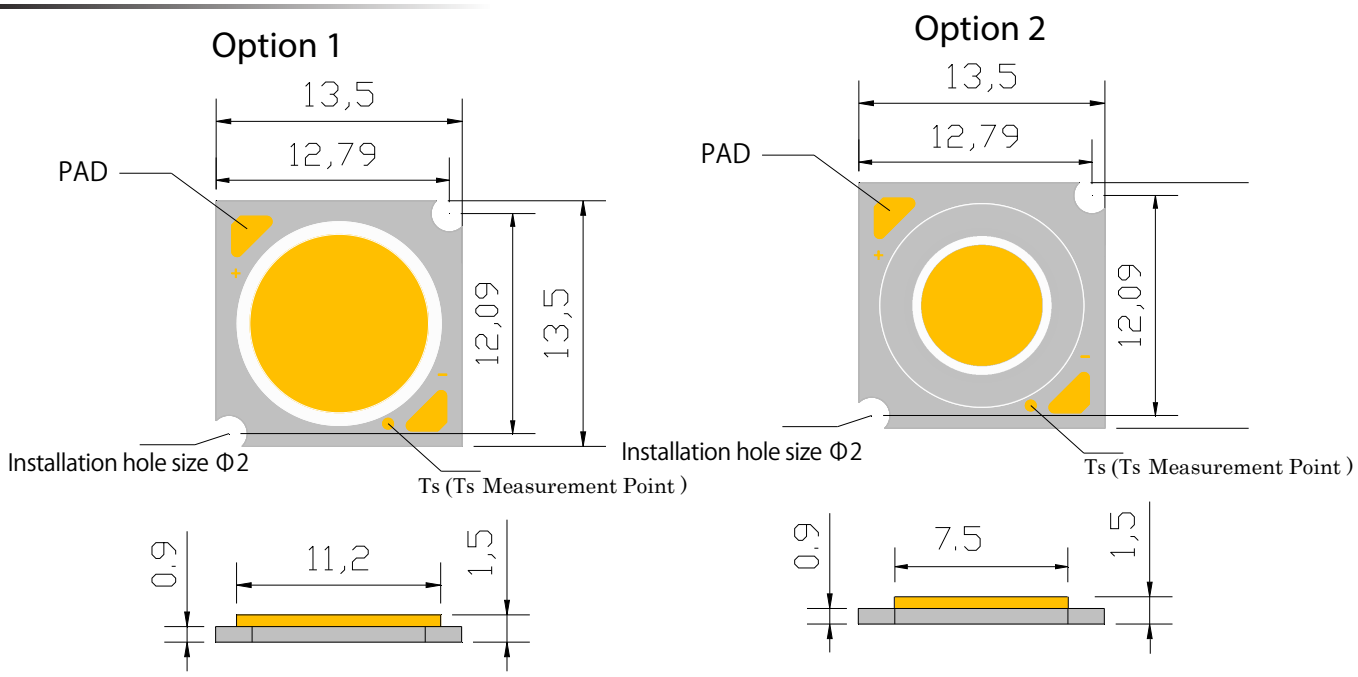


All dimensions are in millimeters (mm), tolerances are ±0.25 mm

## Electro Optical Parameters

| Parameters | Conditions | Min | Typ | Max | Unit |
|---|---|---|---|---|---|
| Forward V | IF=350mA | 8.5 | 9 | 10 | V |
| Forward A | | 180 | 350 | 500 | mA |
| Luminous flux IF=350mA | TC=2700K | 350 | 370 | 410 | LM |
| | TC=3000K | 350 | 375 | 420 | |
| | TC=4000K | 385 | 405 | 405 | |
| | TC=5000K | - | - | - | |
| | TC=5700K | - | - | - | |
| | TC=6000K | 365 | 385 | 425 | |
| | TC=6500K | - | - | - | |
| Power | IF=350mA | - | 3 | - | W |
| Ra | | 80 | - | - | |

The tolerance of measurement at our tester is luminous flux+/-10%
Luminous flux inside the integrating sphere measurements.

## Absolute Maximum Ratings

| Item | Symbol | Condition | Min | Typ | Max | Unit |
|---|---|---|---|---|---|---|
| Operating Temperature | $T_{Topr}$ | $I_F$=100mA | - 10 | -- | +85 | ℃ |
| Storage Temperature | Tstg | $I_F$=100mA | - 40 | -- | +100 | ℃. |
| Soldering Temperature | Tsol | $I_F$=100mA | -- | -- | 350 | ℃ |
| Junction temperature | Tj | $I_F$=100mA | -- | 115 | 125 | ℃ |
| Thermal Resistance | Rj-c | $I_F$=100mA | -- | -- | 1.34 | ℃/W |
| Antistatic Ability | ESD | $I_F$=100mA | 2000 | 20 | -- | V |

Note.The temperature of Aluminum PCB do not exceed 85 .

When hand soldering, keep the temperature of iron below 350°C and for less than 5 seconds

## Chromaticity Coordinate Groups

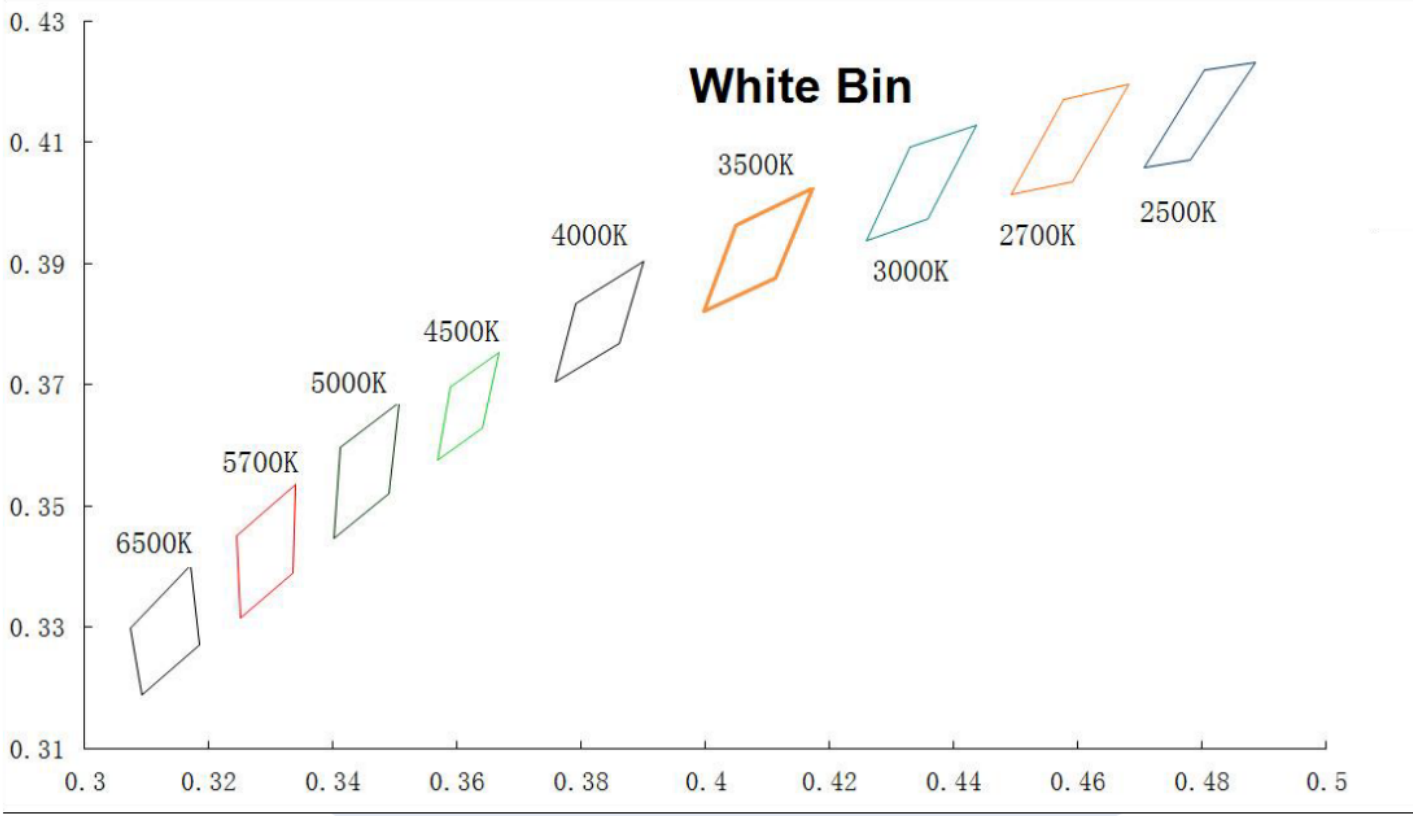

## Color Temperature and BIN

| CT | 2500K | 2700K | 3000K | 3500K | 4000K | 4500K | 5000K | 5700K | 6000K | 6500K |
|---|---|---|---|---|---|---|---|---|---|---|
| CT Range | 2410-255 | 2640-281 | 2940-314 | 3330-358 | 3820-412 | 4375-463 | 4840-520 | 5400-590 | 5700-630 | 6150-685 |
| CT Factor | ±70 | ±85 | ±100 | ±125 | ±150 | ±130 | ±180 | ±250 | ±300 | ±350 |
| Center CT | 2480 | 2725 | 3045 | 3465 | 3985 | 4503 | 5028 | 5665 | 6000 | 6530 |

| CCT | X1 | Y1 | X2 | Y2 | X3 | Y3 | X4 | Y4 |
|---|---|---|---|---|---|---|---|---|
| 6500K | 0.3178 | 0.3336 | 0.3184 | 0.3271 | 0.3093 | 0.3188 | 0.3084 | 0.3243 |
| 6000K | 0.3152 | 0.3370 | 0.3167 | 0.3241 | 0.3277 | 0.3330 | 0.3274 | 0.3470 |
| 5700K | 0.3338 | 0.3463 | 0.3336 | 0.3390 | 0.3251 | 0.3315 | 0.3248 | 0.3383 |
| 5000K | 0.3498 | 0.3595 | 0.3490 | 0.3520 | 0.3401 | 0.3446 | 0.3406 | 0.3521 |
| 4500K | 0.3667 | 0.3753 | 0.3654 | 0.3691 | 0.3579 | 0.3636 | 0.3589 | 0.3697 |
| 4000K | 0.3901 | 0.3904 | 0.3881 | 0.3836 | 0.3774 | 0.377 | 0.3791 | 0.3835 |
| 3500K | 0.4173 | 0.4025 | 0.4143 | 0.3951 | 0.4023 | 0.3892 | 0.4048 | 0.3963 |
| 3000K | 0.4436 | 0.4129 | 0.4397 | 0.4051 | 0.4294 | 0.4015 | 0.4328 | 0.4092 |
| 2700K | 0.4681 | 0.4196 | 0.4636 | 0.4116 | 0.4535 | 0.4092 | 0.4577 | 0.4171 |
| 2500K | 0.4885 | 0.4232 | 0.4833 | 0.4152 | 0.414 | 0.422 | 0.4885 | 0.4232 |

Luminous flux efficiency vs operating power (blue line)
Relative Luminous Flux vs Operating power (yellow line)

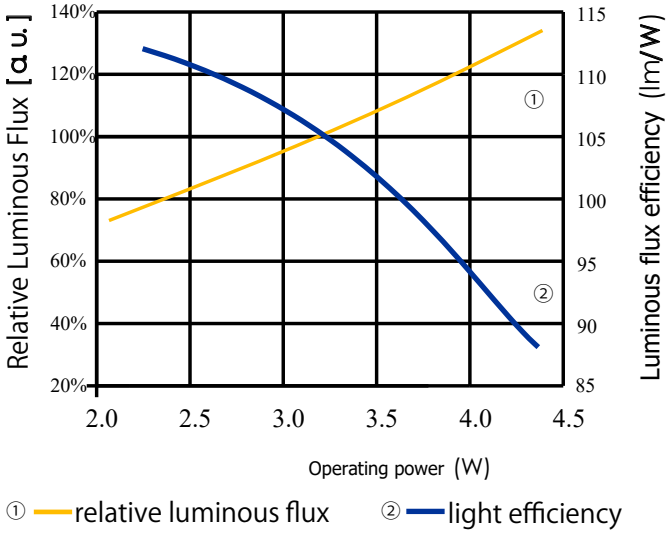


Relative Luminous Intensity vs Substrate Temperature (Tc=25℃)

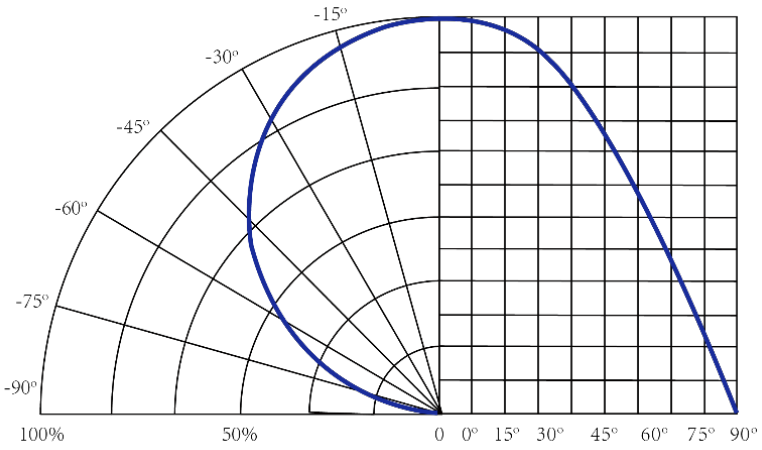


Relative Luminous Intensity vs Substrate Temperature

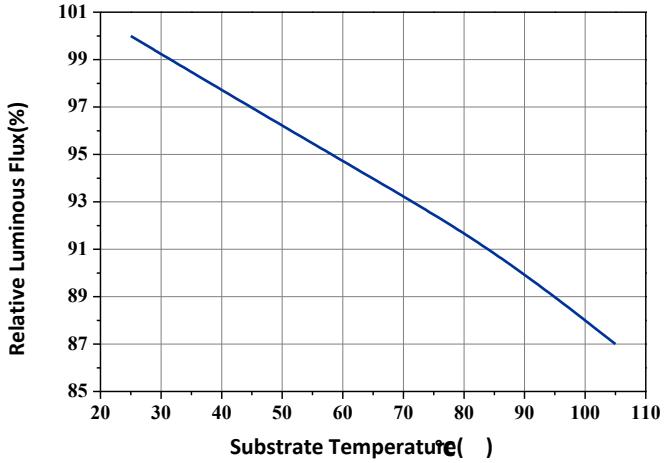

Forward Voltage vs Substrate Temperature(Tc=25 C)

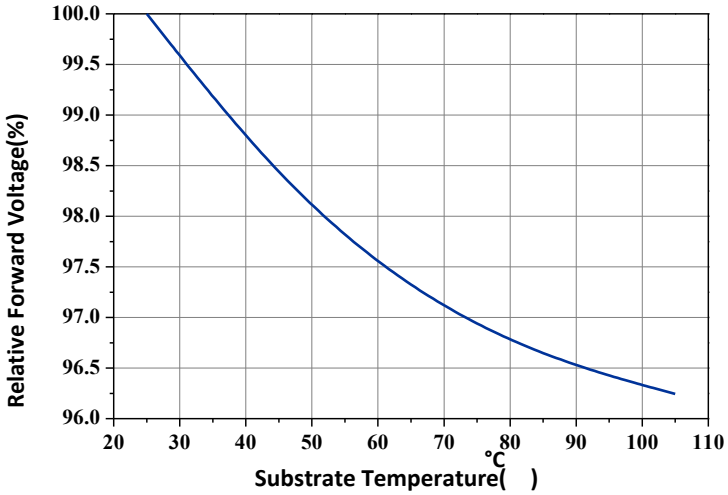


Relative Luminous Flux vs Forward Current (Tc=25℃)

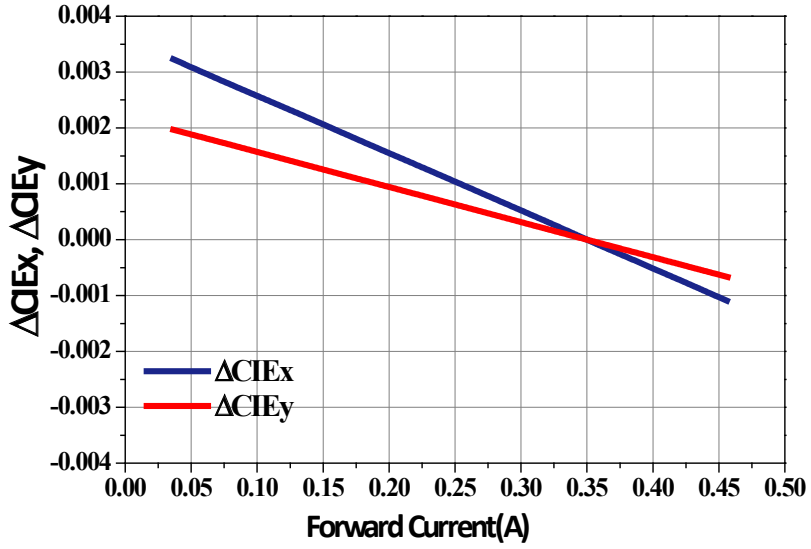


Relative Luminous Intensity vs Substrate Temperature (Tc=25℃)

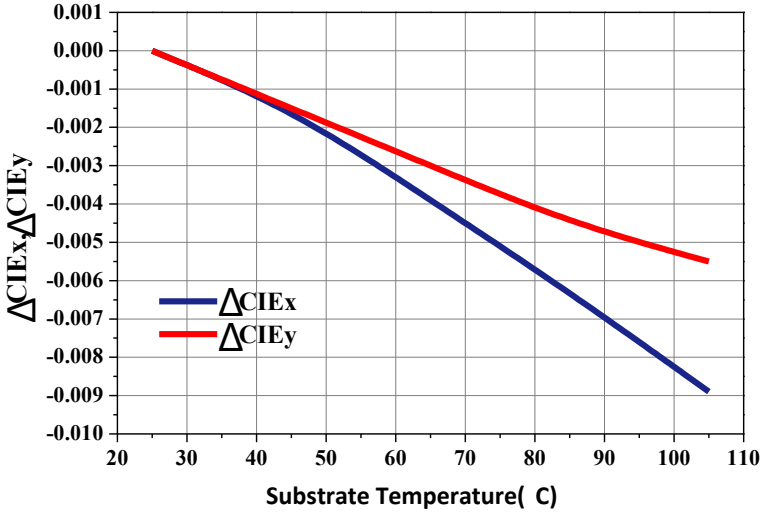

Relative Intensity vs Wavelength

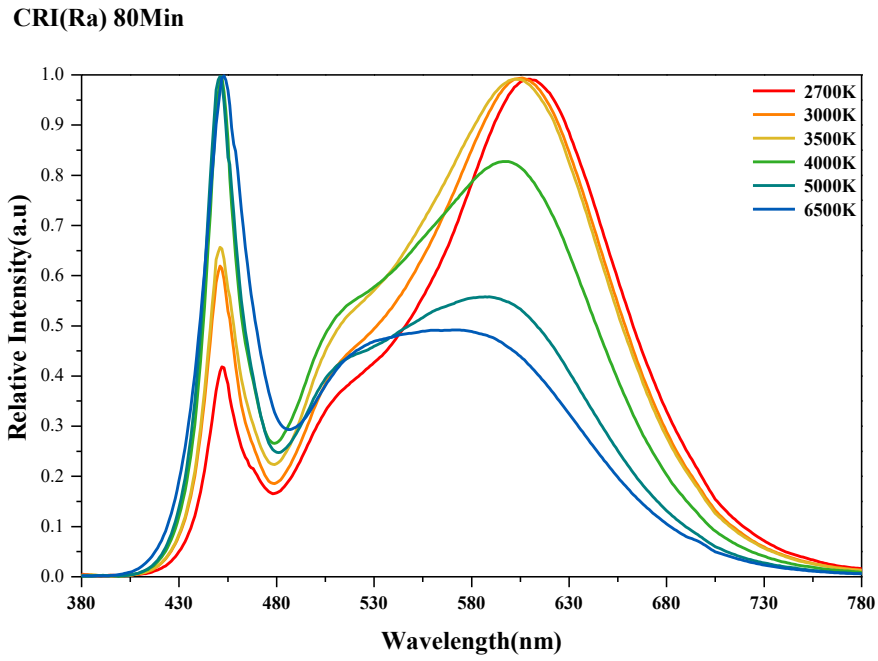


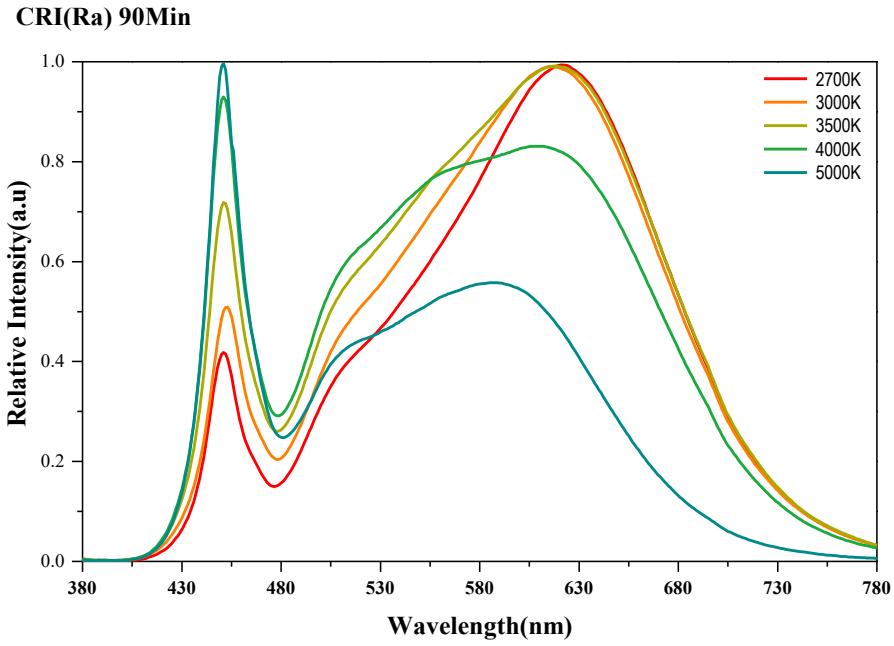

## Encoding

XX- XX - XX XXX-XXXX-XX XX X

[1] [2] [3] [4] [5] [6] [7] [8]

[1] (Product code)

[2] (Emitting Surface Code)

[3] (Product Series Type Example LQ)

[4] (Power) e.g.24W 024

[5] If typical Current (mA)

[6] (CCT) e.g.R3000K 30

[7] (CRI) 80

[8] (Revision) e.g.A

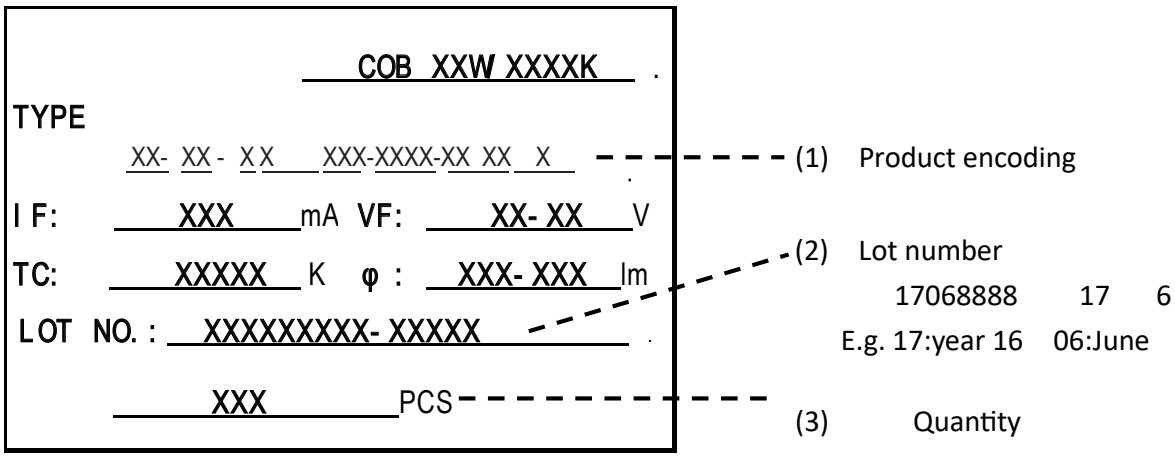

# Manner of packing

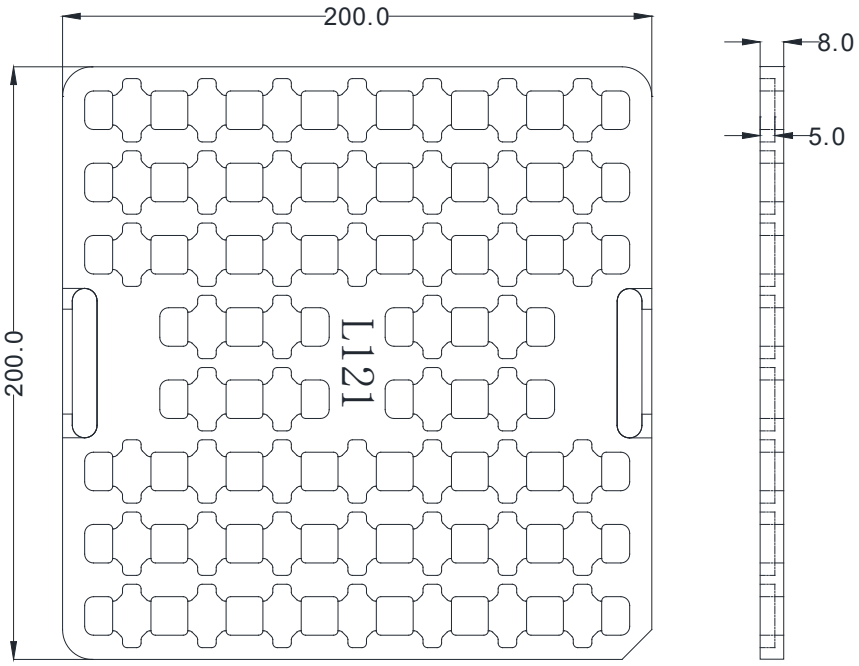


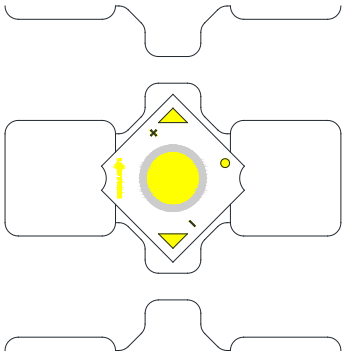

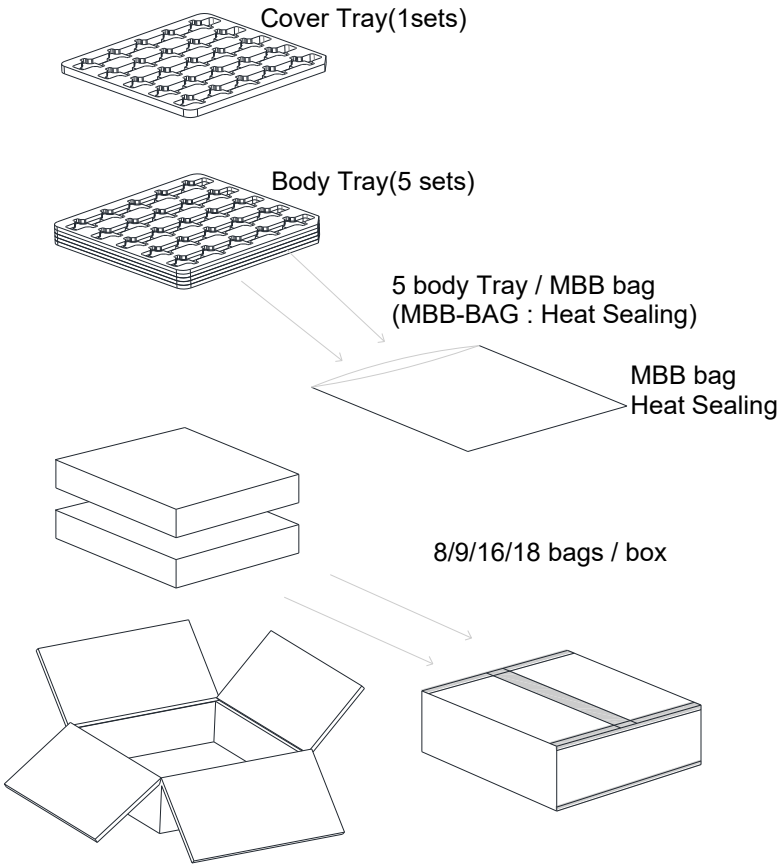


1)
An electrostatic bag contains five sets, and a set contains 50 PCS of COB .(Smallest packing unit:250 PCS)

2)
A white label contains , product name, quantity and lot number is placed on the electrostatic bag.
(Tray Dimension: 200*200*8 mm)

## Cautions

**Storage**
Store the parts in a dry, nitrogen- purged cabinet or container that actively maintains the temperature at 20 - 30 and the RH at no greater than 60%.

**Precautions for Use**
By using anti - static - electricity bracelets/ cushions/ overalls/ shoes/gloves and anti - static - electricity containers,
it can effectively prevent static electricity and surge. The soldering iron point should be properly grounded. When hand soldering, keep the temperature of iron below less 350°C and less than 5 seconds

**ESD Protection**
You need to take the protective measures for the product being sensitive to static electricity. It can lead to product damage electricity is beyond the maximum rating. The ground resistance if the high voltage current made by static can't beyond 10 Ω.

**Cleaning**
Please do not make the thermal grease, oil exposed to the light - emitting surface. Airgun can be used to remove dirt. Gun's Pressure: 0.5MPa, Time: 1 to 2 seconds, Distance: more than 20cm.

**Overcurrent Protection**
It is recommended to design PCB with ground circuit. Pay special attention to the operating environment of the products. Humidity must be between 50% and 80%, or else electrostatic breakdown and overcurrent damage would occur. The operating temperature is -10°C ~ 85°C. When using this product, please observe the absolute maximum ratings and the instructions for operating outlined in these data sheets. Company do not assume any responsibility for any damage, resulting from use of product which does not comply with the absolute maximum rating.

## Thermal Design

The thermal design to draw heat away from the LED junction is most critical parameter for an LED illumination system.High operating temperatures at the LED junction
adversely affect the performance of LED's light output and lifetime. Therefore the LED
junction temperature should not exceed the absolutemaximumrating in LED illumination system.

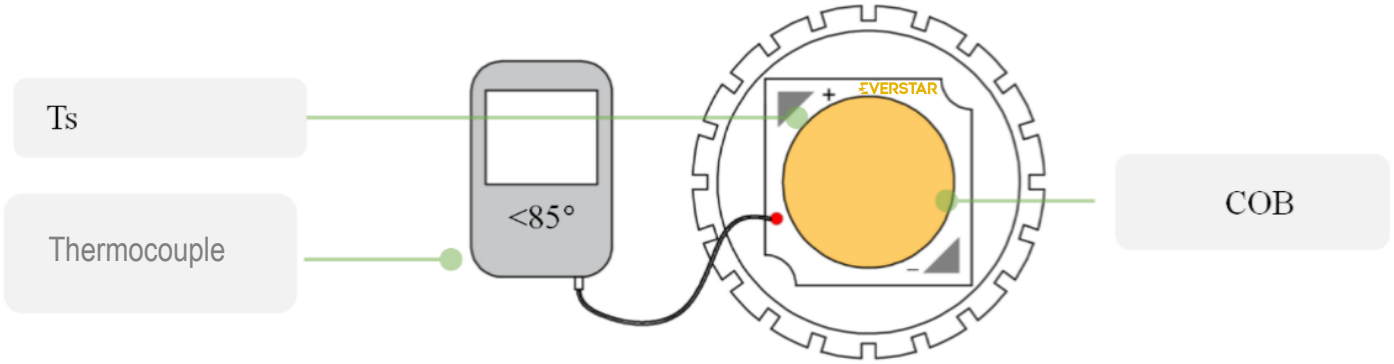


## Safety Tips

During using this product, the country relative safety standards (eg. GB7000.1 - 2007)
should be accorded with. We will not be liable for the users' acts of non - observance of the country safety standards