EVERSTAR
The Brightest LED

DATASHEET

ES-2835-109V-XX-XXX

ES-2835-109V-XX-XXX Datasheet

This 2835 LED Light Source is a high performance energy efficient device which can handle high thermal and high driving current. The small package outline and high intensity make it an ideal choice for LED panel light, LED bulb light, LED tube light, backlighting and etc.

The White Power LED is available in the range of color temperature from 2700K to 7000K. This part has a foot print that is compatible to most of the same size LED in the market today.



FEATURES

- Available in Cool White, Neutral White and Warm White color
- ANSI-compatible chromaticity bins
- High luminous Intensity and high efficiency
- Compatible with reflow soldering process
- Low thermal resistance
- Long operation life
- Wide viewing angle at 120°
- Silicone encapsulation
- Environmental friendly, RoHS Compliance

APPLICATIONS

- Flat panel light
- Backlighting
- LED tube light
- LED bulb light
- Decorative and landscape lighting
- Signage and channel letter
- Reading lamp
- Decorating and entertainment lighting
- Architectural lighting

PACKAGE DIMENSIONS

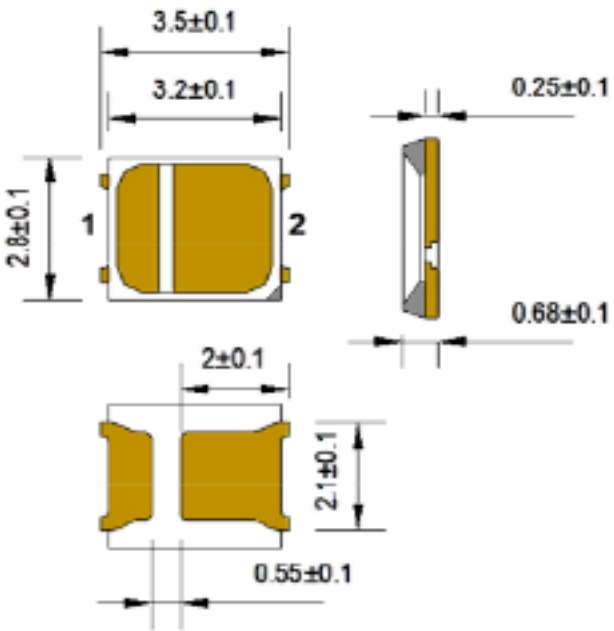

RECOMMENDED SOLDER PAD DESIGN

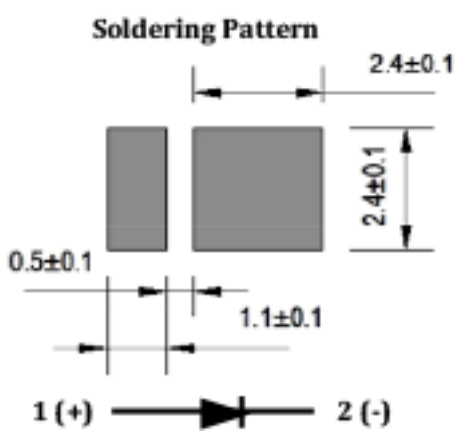

Notes:
1. All dimensions in millimeters.
2. Thickness tolerance of copper plate is ±0.02mm.
3. Thickness tolerance of product is ±0.05mm.
4. Tolerance is ±0.1mm unless otherwise noted.

ABSOLUTE MAXIMUM RATINGS

Item	Symbol	Absolute Maximum Rating	Unit
Forward current	I_F	120	mA
Peak Forward Current [1]	I_{FP}	200	mA
Reverse Voltage	V_R	5	V
Power Dissipation	Pd	1000	mW
Operating Temperature	T_{opr}	-40~+85	℃
Storage Temperature	T_{stg}	-40~+100	℃
Soldering Temperature	T_{sld}	Soldering: 260℃ for 10 seconds	
LED Junction Temperature	T_j	125	℃

I_{FP} Conditions: Pulse Width ≤10msec. and Duty ≤1/10.

CHARACTERISTICS (Tj=25°C)

Item	Symbol	Condition	Min	Typ	Max	Unit
Forward Voltage	V_F	I_F=100mA	8.4	--	9.6	V
Viewing Angle	$2\theta_{1/2}$	I_F=100mA	--	120	--	deg.
Luminous Flux	Φv	I_F=100mA	113	--	155	lm
Color Rendering Index	CRI	I_F=100mA	80	--	--	--
Color Temperature	CCT	I_F=100mA	2700	--	7000	K
Thermal Resistance (Junction to Solder point)	R_{th-js}	I_F=100mA	--	20	--	℃/W

Notes:
1. Luminous flux is measured with an accuracy of ± 10%.
2. Chromaticity coordinate bins are measured with an accuracy of ± 0.01.
3. CRI is measured with an accuracy of ± 2.
4. Some color and CRI bins may have limited availability, please contact us before ordering.
5. All measurements were made under the standardized environment of Everstar

RELATIVE SPECTRAL POWER DISTRIBUTION (T_j=25°C)

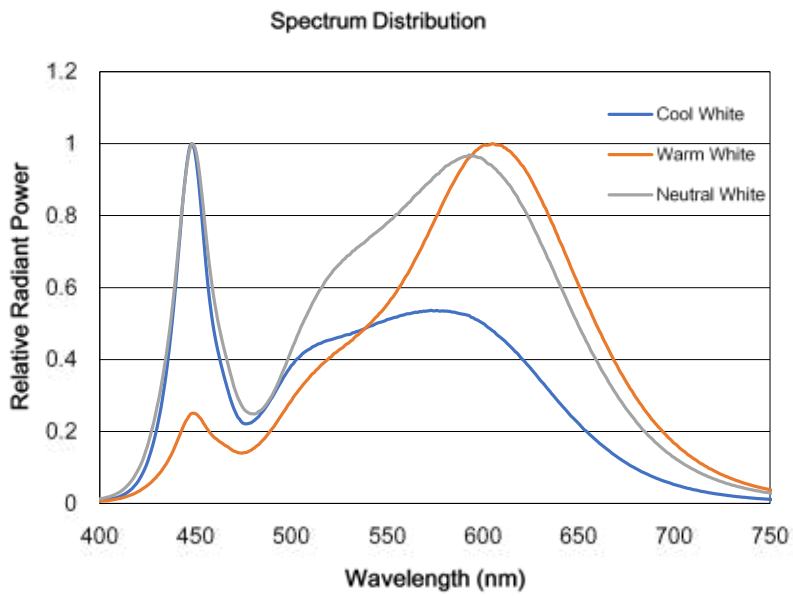

TYPICAL SPATIAL DISTRIBUTION

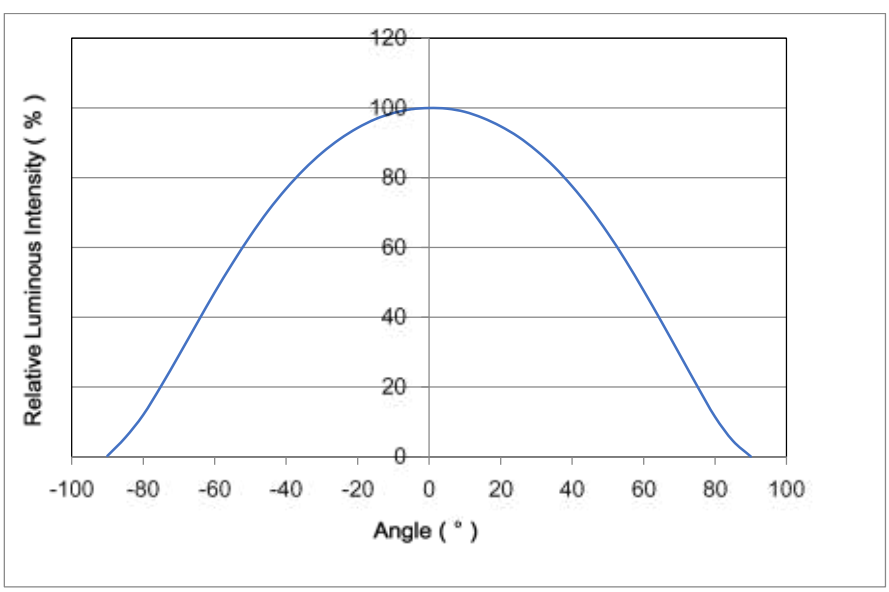

RELATIVE LUMINOUS FLUX VS.CURRENT (T_j=25°C)

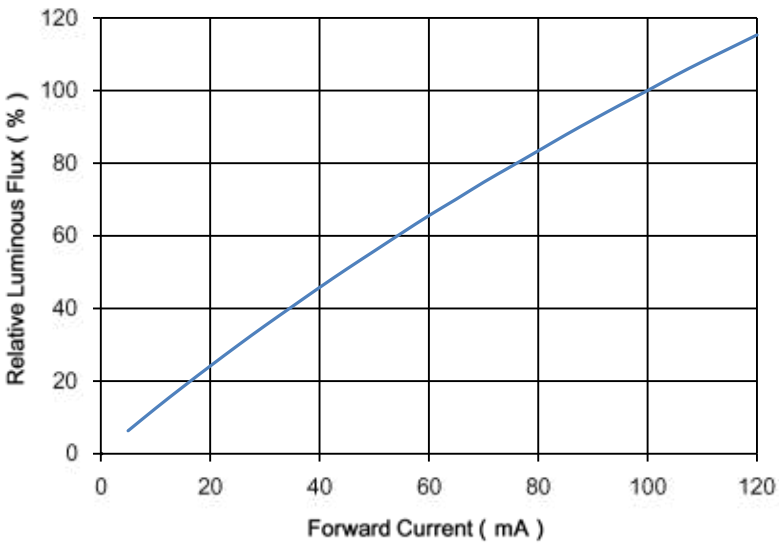

ELECTRICAL CHARACTERISTICS (T_j=25°C)

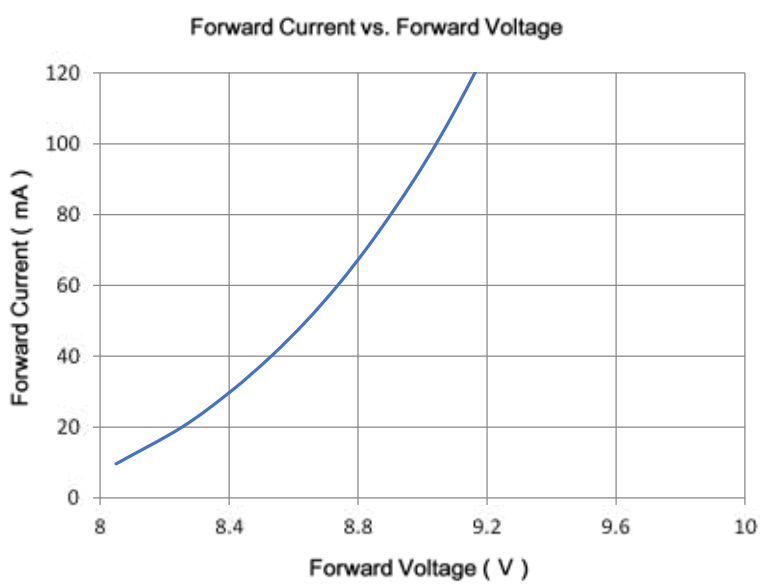

MAXIMUM CURRENT VS. AMBIENT TEMPERATURE

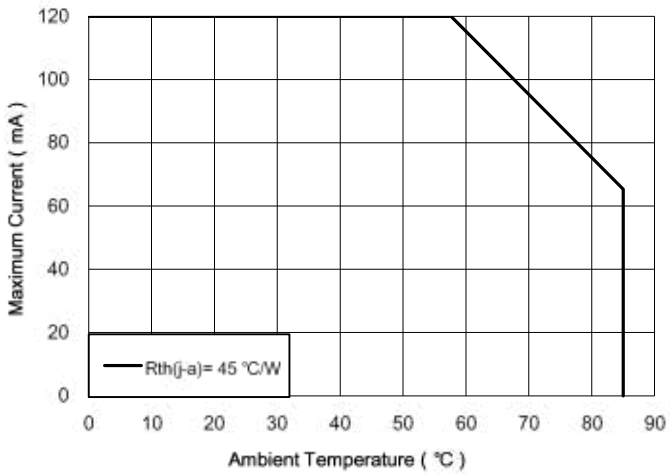

RELATIVE RADIANT FLUX VS. JUNCTION TEMPERATURE

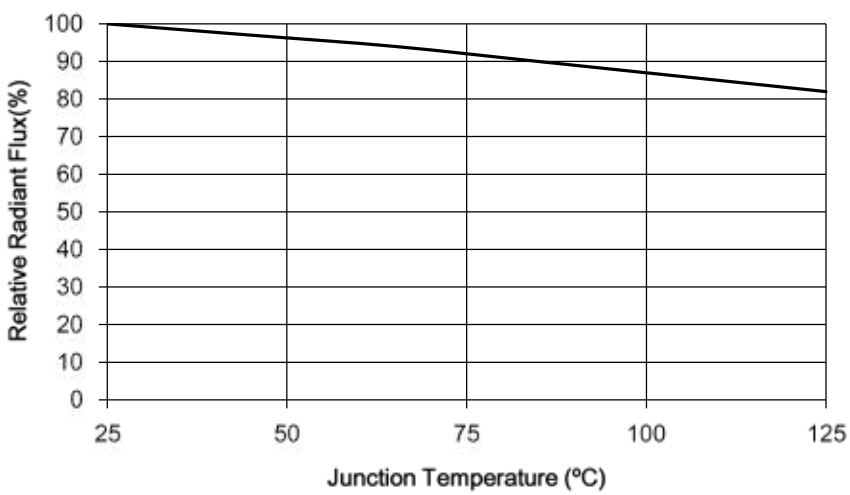

SORTING RANKS

(1) Luminous Flux (Tj=25℃)

Ordering code	Condition	Rank			Unit
		L1	L2	L3	
ES-2835-109V-XX-827	100mA	115-120	120-125	130-140	lm
ES-2835-109V-XX-830		118-122	125-130	140-150	
ES-2835-109V-XX-840		128-135	138-145	150-155	
ES-2835-109V-XX-860		128-135	138-145	150-155	
ES-2835-109V-XX-865		128-135	138-145	150-155	

(2) Forward Voltage (Tj=25℃)

Rank	Condition	Min.	Max.	Unit
V1	100mA	8.8	9.1	V
V2	100mA	9.1	9.3	V

Notes:
1. 10% tolerance for luminous intensity may be caused by measurement inaccuracy.
2. Measurement Uncertainty of the Forward Voltage : ± 3%

(3) Chromaticity Bins

Part Number	ES2835-109V-XX-827					
Bin Code	CCT	Color Coordinates (X,Y)				
27-5	2700K	X	0.4729	0.4521	0.4425	0.4627
		Y	0.4254	0.4204	0.3951	0.3998

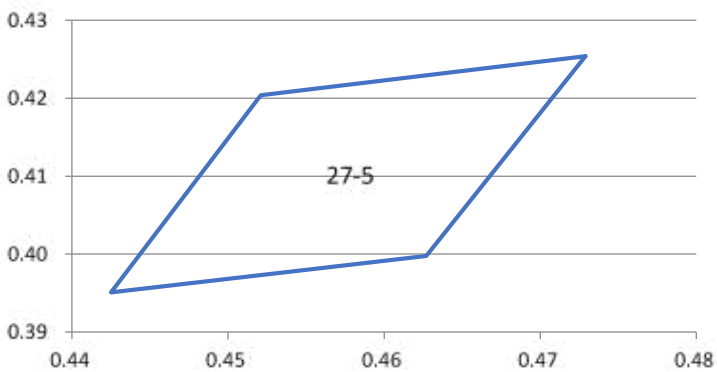

Part Number	ES2835-109V-XX-830					
Bin Code	CCT	Color Coordinates (X,Y)				
30-5	3000K	X	0.4504	0.4278	0.4196	0.4408
		Y	0.4198	0.4128	0.3873	0.3938

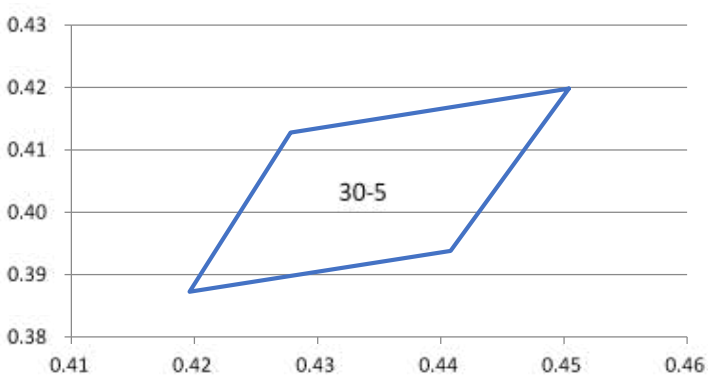

Part Number	ES-2835-109V-XX-840					
Bin Code	CCT	Color Coordinates (X,Y)				
40-5	4000K	X	0.3967	0.3726	0.3682	0.3905
		Y	0.4006	0.3855	0.3598	0.3733

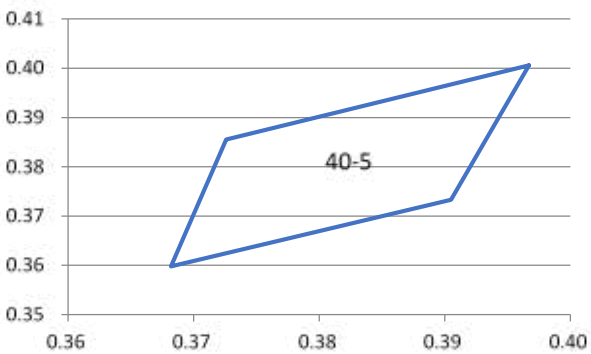

Part Number	ES-2835-109V-XX-860					
Bin Code	CCT	Color Coordinates (X,Y)				
60-5	6000K	X	0.3296	0.3137	0.3151	0.3287
		Y	0.3527	0.3384	0.3177	0.3296

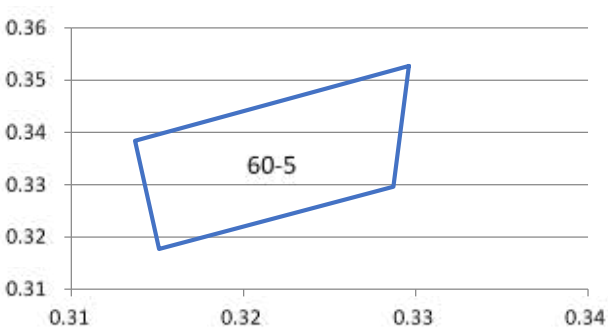

Part Number	ES-2835-109V-XX-865				CCT	6500K
Bin Code	CCT	Color Coordinates (X,Y)				
65-5	6325-6746K	X	0.3154	0.3086	0.3096	0.3161
		Y	0.3345	0.3277	0.3219	0.3284

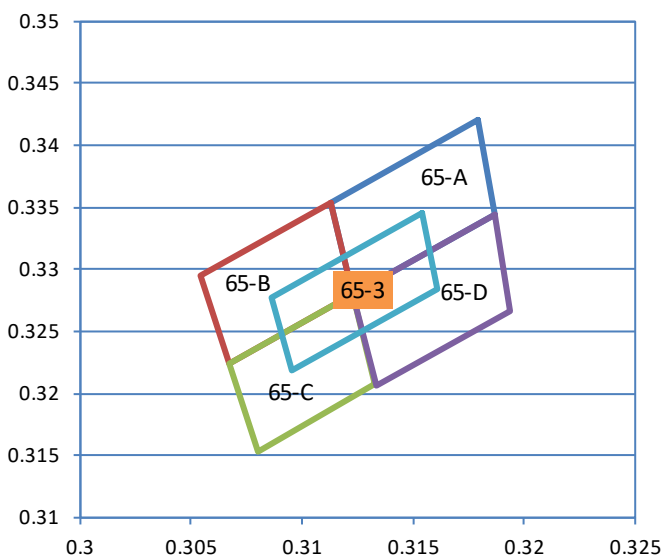

REFLOW SOLDERING CHARACTERISTICS

Preheating140℃~160℃±5℃,within 2 minutes.
Operation heating : 260℃(Max.) within 10 seconds.(Max)
Gradual Cooling (Avoid quenching).

Lead solder		Lead-free solder	
Pre-heat	120-150℃	Pre-heat	150-200℃
Pre-heat time	120 sec.Max.	Pre-heat time	120 sec.Max.
Peak Temperature	240℃ Max.	Peak Temperature	260℃ Max.
Soldering time condition	10 sec.Max.	Soldering time condition	10 sec.Max.

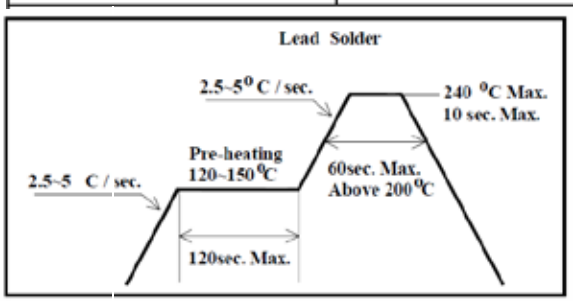

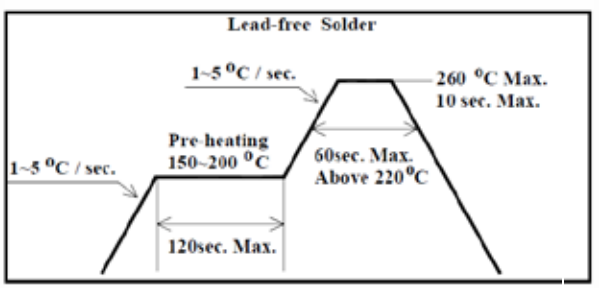

Notes:
The encapsulated material of the LEDs is silicone . Therefore the LEDs have a soft surface on the top of package. The pressure to the top surface will be influence to the reliability of the LEDs. Precautions should be taken to avoid the strong pressure on the encapsulated part. So when using the picking up nozzle, the pressure on the silicone resin should be proper.

TAPE AND REEL

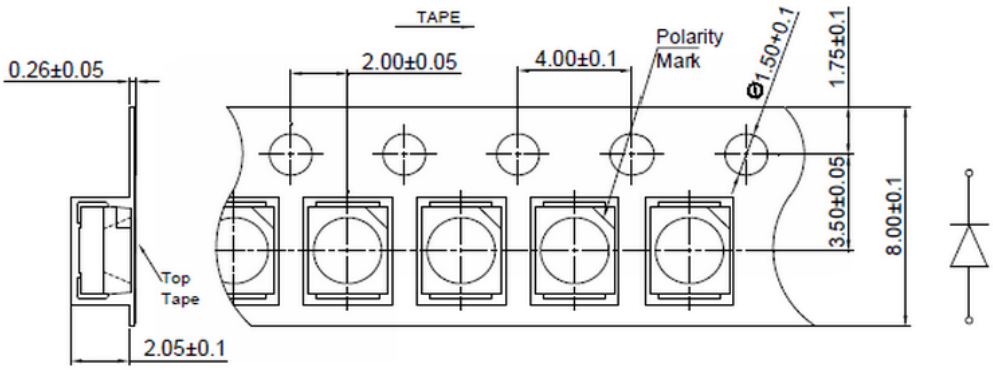

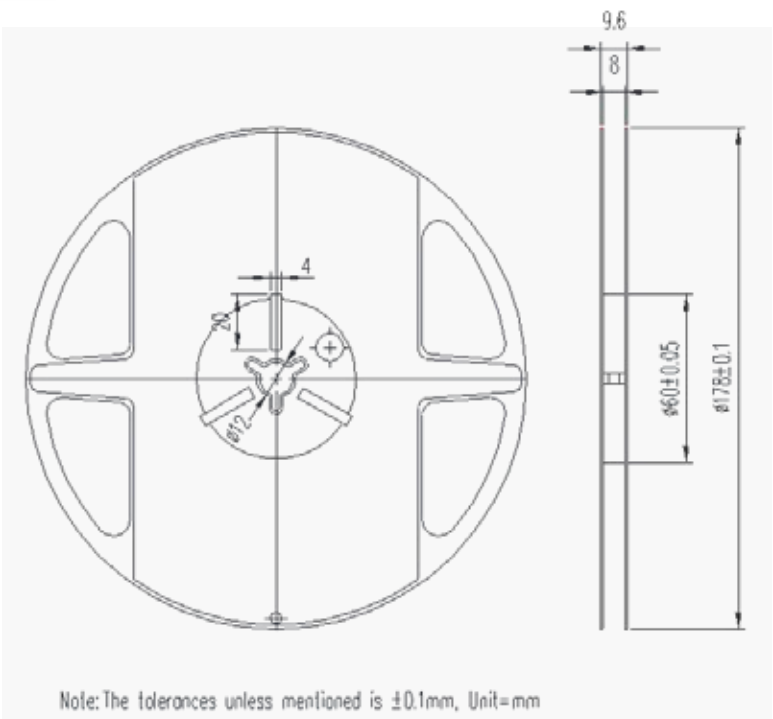

Notes:
(1) Quantity : 4,000pcs/Reel
(2) Cumulative Tolerance : Cumulative Tolerance/10 pitches to be ±0.2mm
(3) Adhesion Strength of Cover Tape : Adhesion strength to be 0.1-0.7N when the cover tape is turned off from the carrier tape at the angle of 10º to the carrier tape
(4) Package : P/N, Manufacturing data Code No. and quantity to be indicated on a damp proof Package.

PACKAGING

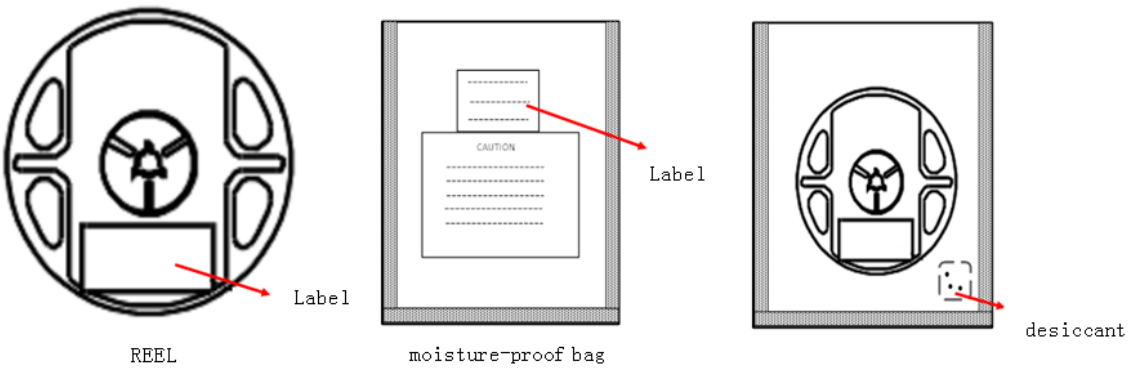

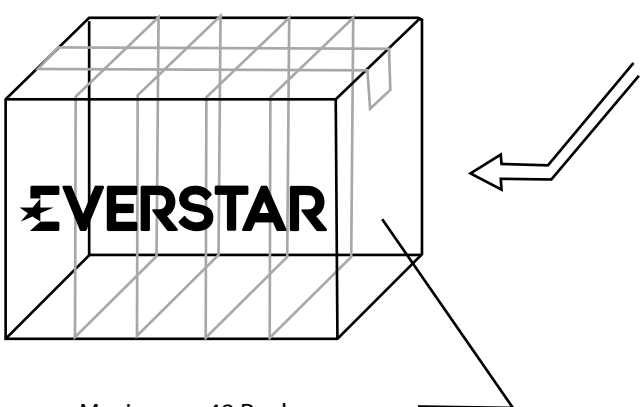

Maximums 48 Reels

TAPE AND REEL

Test Items	Test Duration	Number of Damaged
Steady State Operating Life of High Temperature (HTOL) Ts=85℃, IF=Max	1000hrs	0/20
Steady State Operating Life of Low Temperature (LTOL) Ta=-40℃, IF=Max	1000hrs	0/20
Pulse Wet Operating Life of High Temperature (PWHTOL) 60℃/90%RH, IF30mins ON/30min OFF	500hrs	0/20
High Temperature Storage (HTS) ℃ 80℃	1000hrs	0/20
Low Temperature Storage (LTS) -40℃	1000hrs	0/20
Thermal Shock (TS) -45℃~125℃ 30min dwell 20sec transfer	100cycles	0/20
Solder Resistance (SR) 265℃, 3X MSL	5sec	0/20
Solder Ability (SA) 245℃5sec, 95% coverage	5sec	0/11
Mechanical Shock (MS) 1500G 0.5msec pulse shock	Each6 axis	0/6
Random Vibration (RV) 6G RMS, 10-2000Hz, 10min	Per axis	0/6
Variable Vibration Frequency (VVF) 10-2000-10Hz, log or linear sweep rate, 20G for 1 min, 1.5mm each apply 3x per axis over	6hrs	0/6
Salt Spread (SS) 35℃, 30g/m2/day	48hrs	0/11

Item	Symbol	Test Condition	Criteria for Judgment Min.	Max.
Forward	VF	IF=Typical Current		U.S.L x1.1
Luminous Flux	Im	IF=Typical Current	L.S.L x0.7	
CCX&CCY	x.y	IF=Typical Current		Shift<0.02

PRECAUTION FOR USE

(1) This device should not be used in any type of fluid such as water, oil, organic solvent, etc.
When washing is required, IPA should be used.

(2) When the LEDs are illuminating, operating current should be decided after considering
the ambient maximum temperature.

(3) LEDs must be stored to maintain a clean atmosphere. If the LEDs are stored for 3months or more after being shipped from EVERSTAR, a sealed container with a nitrogen atmosphere should be used for storage.

(4) The LEDs must be used within seven days after opening the moisture proof packing. Repack unused Products with anti-moisture packing, fold to close any opening and then store in a dry place.

(5) The appearance and specifications of the product may be modified for improvement without notice.

(6) This LED is sensitive to the static electricity and surge. It is recommended to use a wrist Band or antielectrostatic glove when handling the LEDs.

(7) On manual soldering, a solder tip must be needed as grounded for usage. If over voltage which exceeds the absolute maximum rating is applied to LEDs, it will cause damage LEDs and result in destruction. Damaged LEDs will show some unusual characteristics such as leak current remarkably increase, turn-on voltage becomes lower and the LEDs get unlighted at low current.