EVERSTAR
The Brightest LED

# DATASHEET

## ES-2835-1072V-L1-XXXX

# ES-2835-1072V-L1-XXXX Datasheet

This 2835 LED Light Source is a high performance energy efficient device which can handle high thermal and high driving current. The small package outline and high intensity make it an ideal choice for LED panel light, LED bulb light, LED tube light, backlighting and etc

This part has a foot print that is compatible to most of the same size LED in the market today.



## FEATURES

- Available in Cool White, Neutral White and Warm White color
- ANSI-compatible chromaticity bins
- High luminous Intensity and high efficiency
- Compatible with reflow soldering process
- Low thermal resistance
- Long operation life
- Wide viewing angle at 120°
- Silicone encapsulation
- Environmental friendly, RoHS compliance

## APPLICATIONS

- Interior & exterior automotive lighting
- Decorative and landscape lighting
- Signage and channel letter
- Decorating and entertainment lighting
- Architectural lighting

## PACKAGE DIMENSIONS

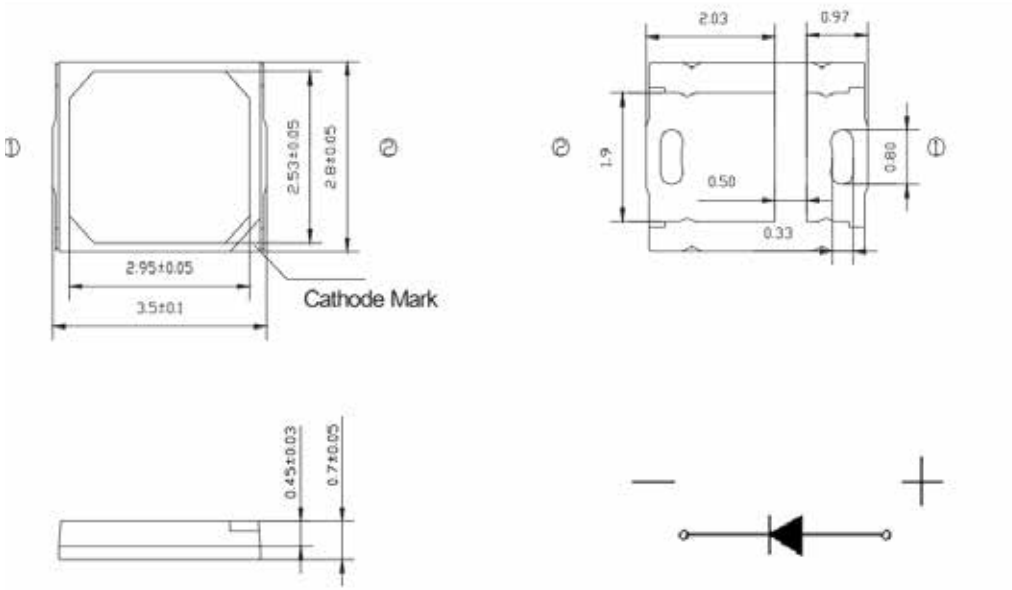


**Recommended Solder Pad Design**

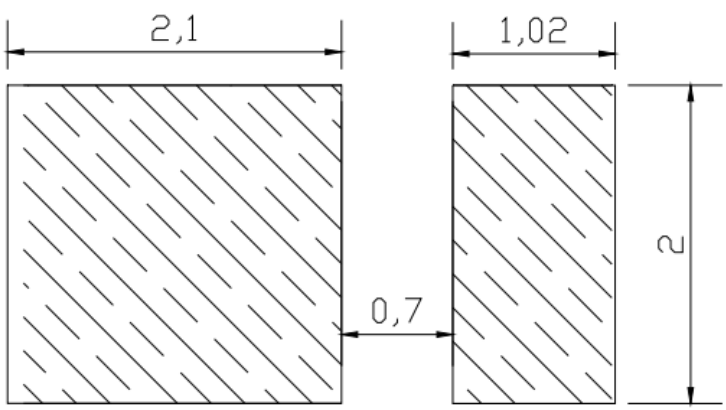


**Notes:**
**1. All dimensions in millimeters.**
**2. Thickness tolerance of copper plate is ±0.02mm.**
**3. Thickness tolerance of product is ±0.05mm.**
**4. Tolerance is ±0.1mm unless otherwise noted.**

## ABSOLUTE MAXIMUM RATINGS

| Parameter | Symbol | Value | Unit |
|---|---|---|---|
| Forward current | $I_F$ | 15 | mA |
| Peak Forward Current | $I_{FP}$ | 20 | mA |
| Reverse Voltage | $V_R$ | 75 | V |
| Power Dissipation | $P_d$ | 1128 | mW |
| Operating Temperature | $T_{opr}$ | -40~+85 | °C |
| Storage Temperature | $T_{stg}$ | -40~+100 | °C |
| Soldering Temperature | $T_{sld}$ | Reflow Soldering: 260°C for 10 seconds | |
| LED Junction Temperature | $T_j$ | 115 | °C |

**$I_{FP}$ Conditions: Pulse Width ≤10msec. and Duty ≤1/10.**

## CHARACTERISTICS (Tj=25°C)

| Parameter | Symbol | Condition | Min. | Typ. | Max. | Unit |
|---|---|---|---|---|---|---|
| Forward Voltage | $V_F$ | IF=15mA | 64 | -- | 72 | V |
| Viewing Angle | $2\theta_{1/2}$ | IF=15mA | -- | 120 | -- | deg. |
| Luminous Flux | Φv | IF=15mA | 20 | -- | 225 | lm |
| Thermal Resistance (Junction to Solder Point) | $R_{th-js}$ | IF=15mA | -- | 15 | -- | °C/W |

**Notes:**
**1. Luminous flux is measured with an accuracy of ± 10%.**
**2. Chromaticity coordinate bins are measured with an accuracy of ± 0.01.**
**3. All measurements were made under the standardized environment of Everstar**

## RELATIVE SPECTRAL POWER DISTRIBUTION (Tj=25°C)

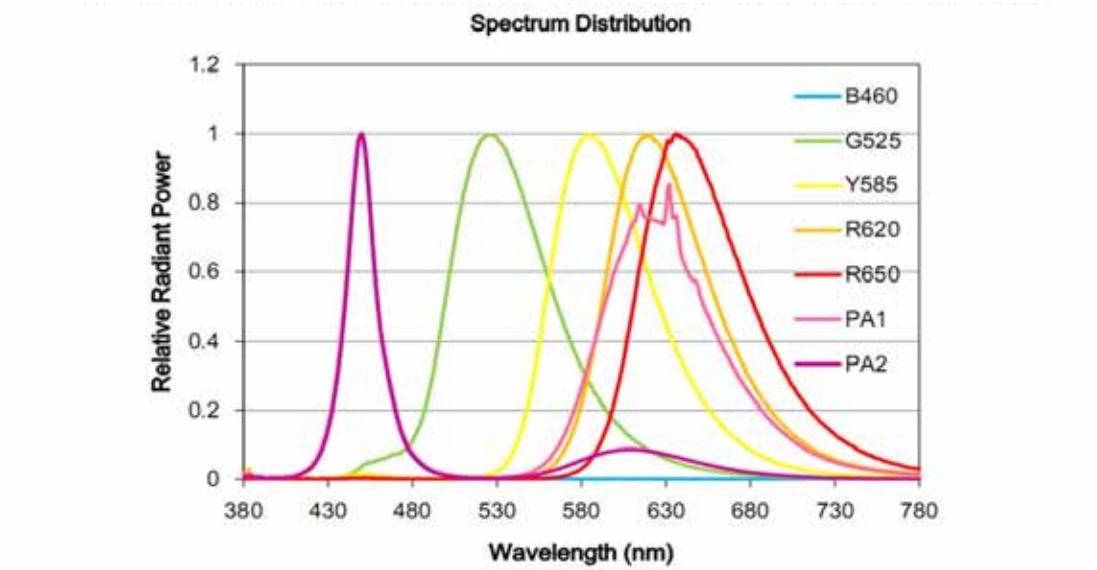


## TYPICAL SPATIAL DISTRIBUTION

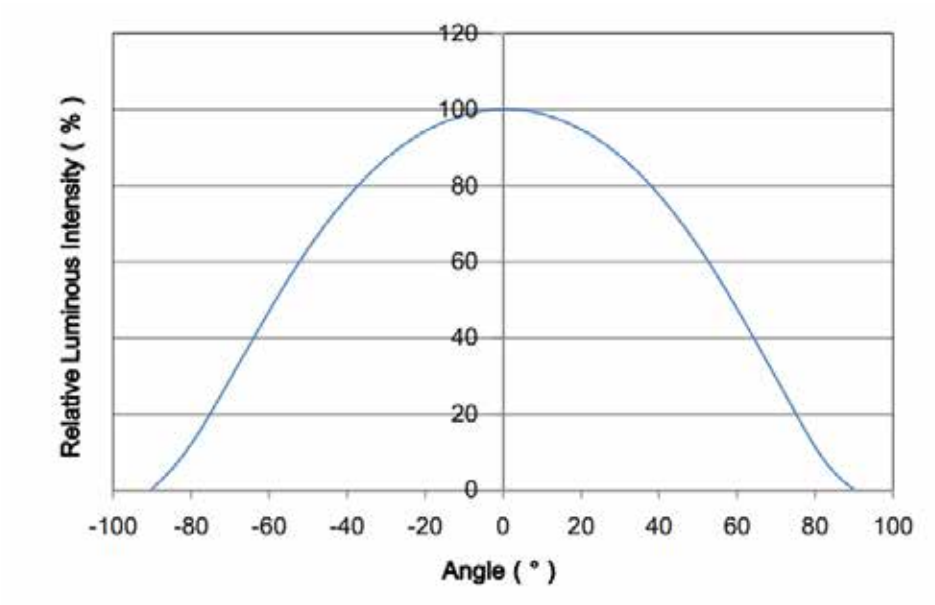

## RELATIVE LUMINOUS FLUX VS. CURRENT (Tj=25℃)

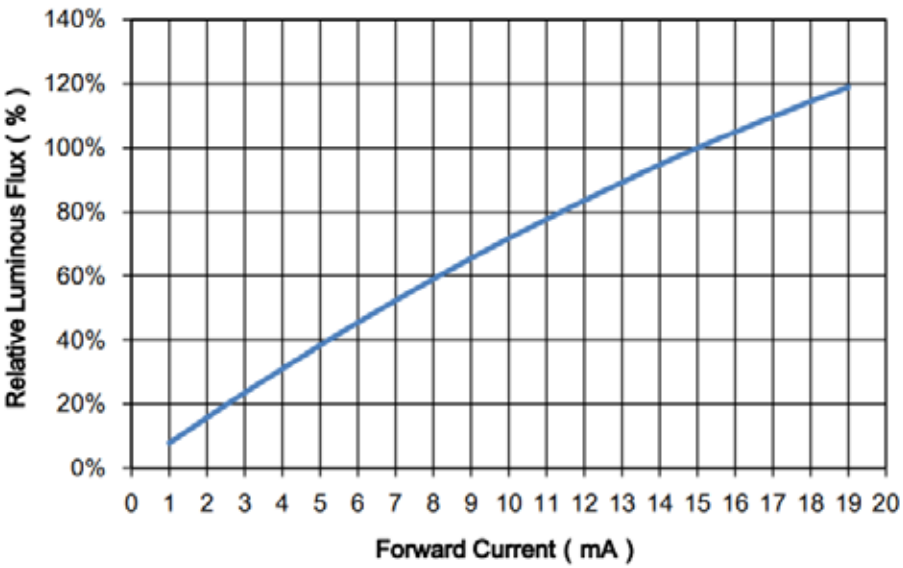


## ELECTRICAL CHARACTERISTICS (Tj=25℃)

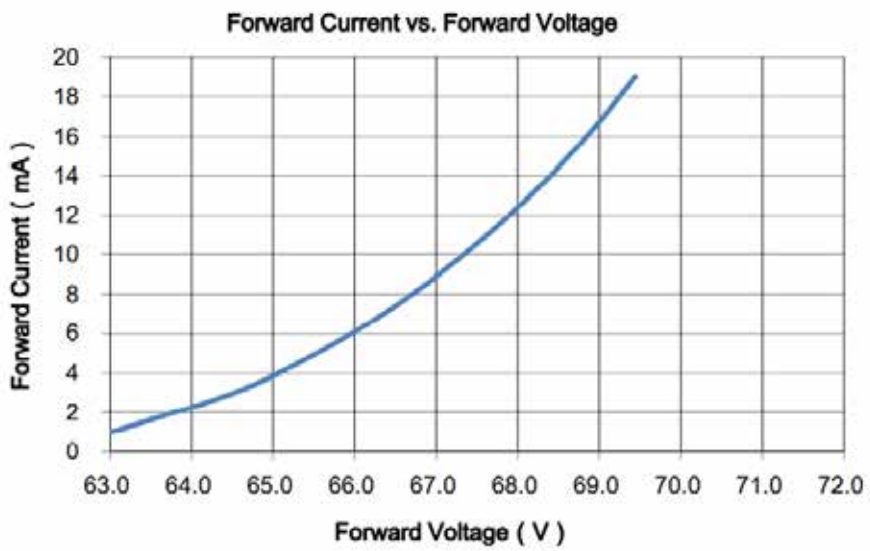

## MAXIUM CURRENT VS. AMBIENT TEMPERATURE

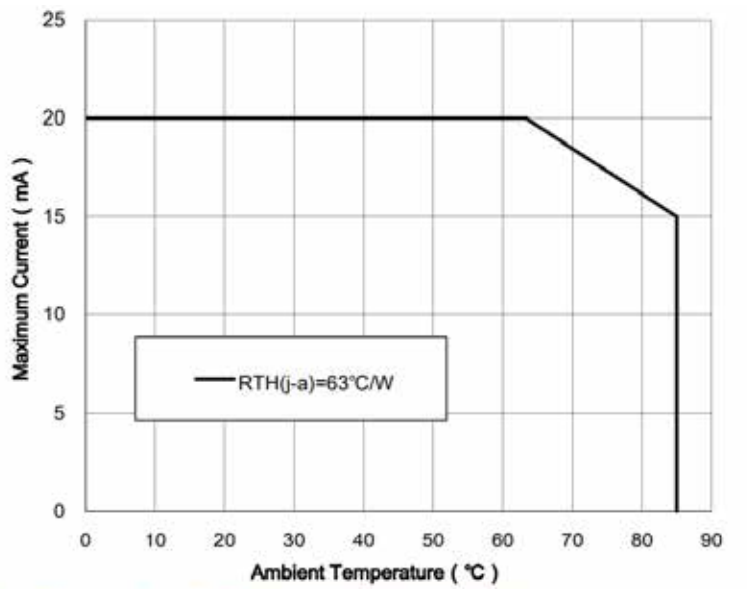


## RELATIVE RADIANT FLUX VS. JUNCTION TEMPERATURE

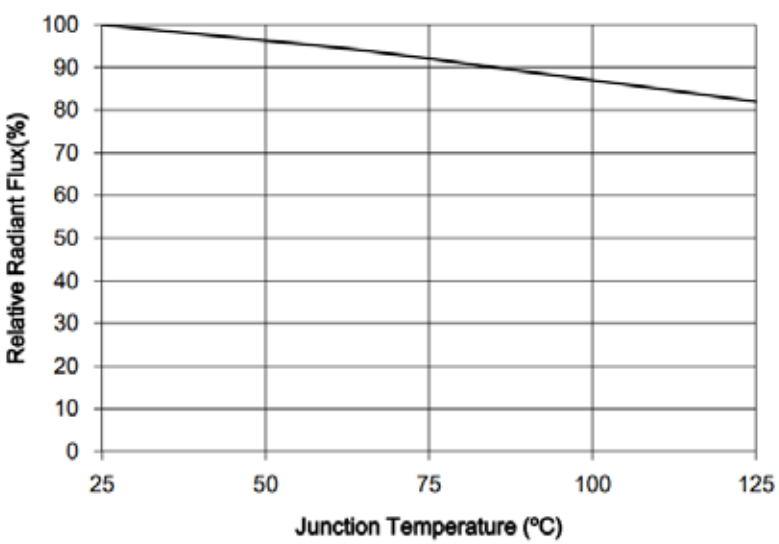

## SORTING RANKS

### (1) Luminous Intensity (Tj=25℃)

| Part No. | Condition | Rank | Unit |
|---|---|---|---|
| ES-2835-1072V-L1-R637 | 15mA | O43<br>38-43 | lm |
| ES-2835-1072V-L1-G525 | | R13<br>215-225 | |
| ES-2835-1072V-L1-B460 | | NA<br>20-22 | |
| ES-2835-1072V-L1-P01P | | Q4<br>140-150 | |

### (2) Forward Voltage (Tj=25℃)

| Rank | Condition | Min. | Max. | Unit |
|---|---|---|---|---|
| J4 | 15mA | 64 | 66 | V |
| J5 | | 66 | 68 | |
| J6 | | 68 | 70 | |
| J7 | | 70 | 72 | |
| J8 | | 72 | 74 | |

**Notes:**
**1. 10% tolerance for luminous intensity may be caused by measurement inaccuracy.**
**2. Measurement Uncertainty of the Forward Voltage : ± 3%**

### (3) Chromaticity Bins

| Rank | | ES-2835-1072V-L1-R637 | | | |
|---|---|---|---|---|---|
| Bin Code | | Color Coordinates(X,Y) | | | |
| R637 | X | 0.6660 | 0.6720 | 0.7060 | 0.7000 |
| | Y | 0.3180 | 0.3320 | 0.3080 | 0.2940 |

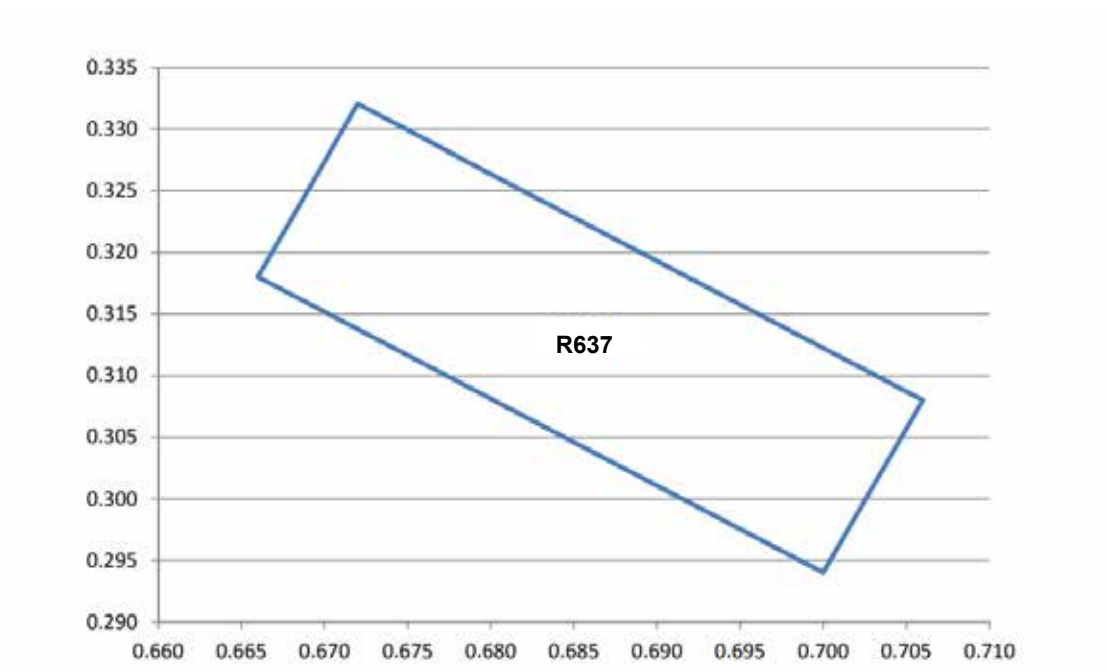

| Rank | | ES-2835-1072V-L1-G525 | | | |
|---|---|---|---|---|---|
| Bin Code | | Color Coordinates(X,Y) | | | |
| G525 | X | 0.2900 | 0.2660 | 0.2760 | 0.3000 |
| | Y | 0.6470 | 0.5650 | 0.5520 | 0.6350 |

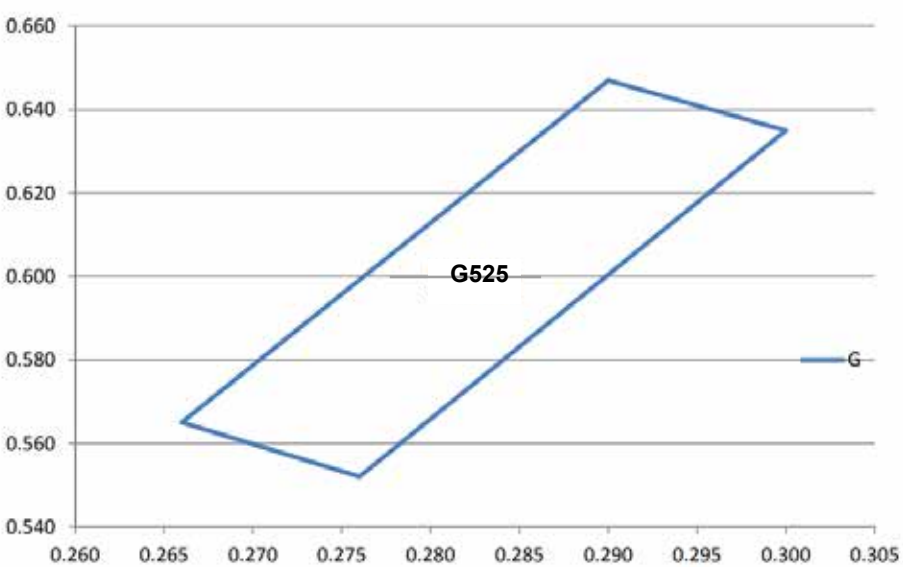

| Rank | | ES-2835-1072V-L1-B460 | | | |
|---|---|---|---|---|---|
| Bin Code | | Color Coordinates(X,Y) | | | |
| B460 | X | 0.1361 | 0.1411 | 0.1691 | 0.1641 |
| | Y | 0.0368 | 0.0068 | 0.0268 | 0.0568 |

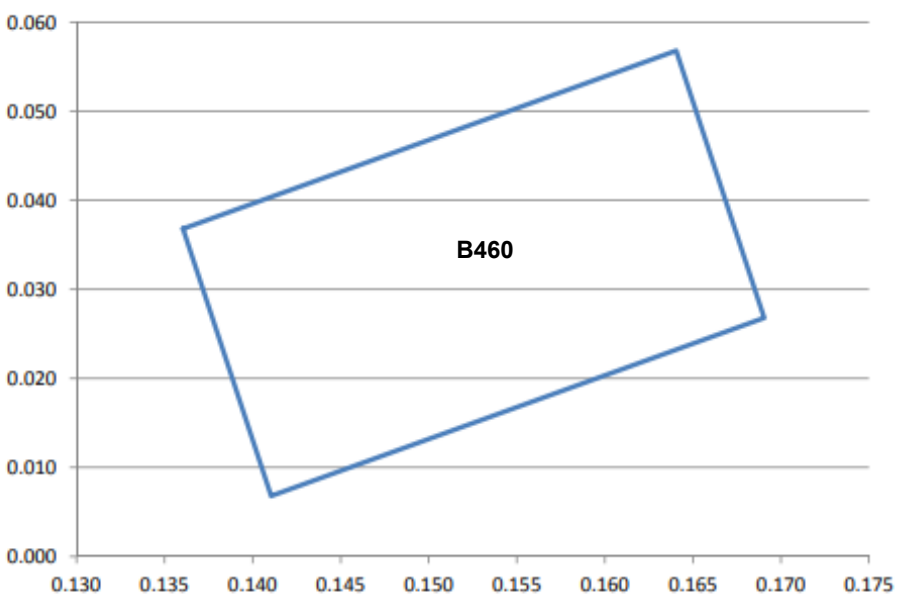

| Rank | | ES-2835-1072V-L1-P01P | | | |
|---|---|---|---|---|---|
| Bin Code | | Color Coordinates(X,Y) | | | |
| P01P | X | 0.3790 | 0.3890 | 0.4320 | 0.4220 |
| | Y | 0.2720 | 0.2420 | 0.2720 | 0.3020 |

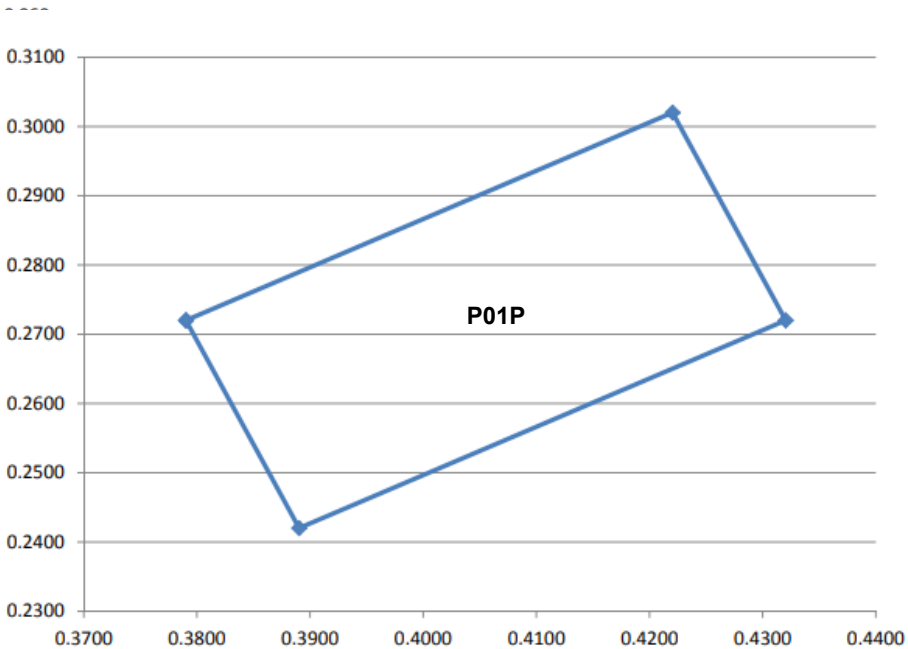

## REFLOW SOLDERING CHARACTERISTICS

For Reflow Process

Preheating : 140℃~160℃±5℃,within 2 minutes.

Operation heating : 260℃(Max.) within 10 seconds.(Max)

Gradual Cooling (Avoid quenching).

| Lead solder | | Lead-free solder | |
|---|---|---|---|
| Pre-heat | 120-150℃ | Pre-heat | 150-200℃ |
| Pre-heat time | 120 sec.Max. | Pre-heat time | 120 sec.Max. |
| Peak Temperature | 240℃ Max. | Peak Temperature | 260℃ Max. |
| Soldering time condition | 10 sec.Max. | Soldering time condition | 10 sec.Max. |

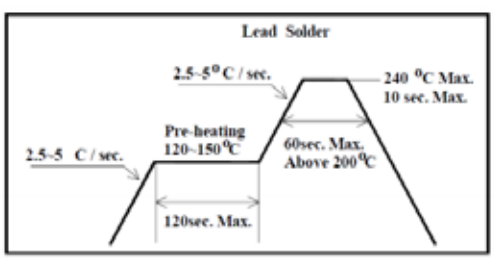


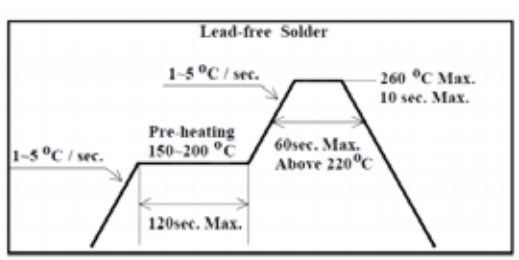


**Notes:**
**The encapsulated material of the LEDs is silicone . Therefore the LEDs have a soft surface on the top of package. The pressure to the top surface will be influence to the reliability of the LEDs. Precautions should be taken to avoid the strong pressure on the encapsulated part. So when using the picking up nozzle, the pressure on the silicone resin should be proper.**

## TAPE AND REEL

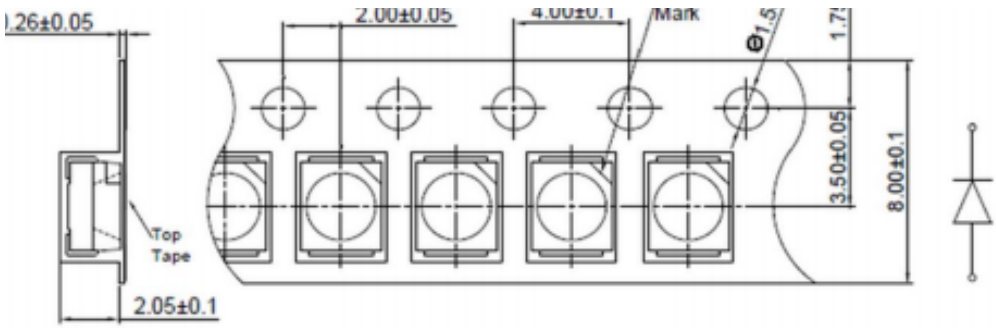


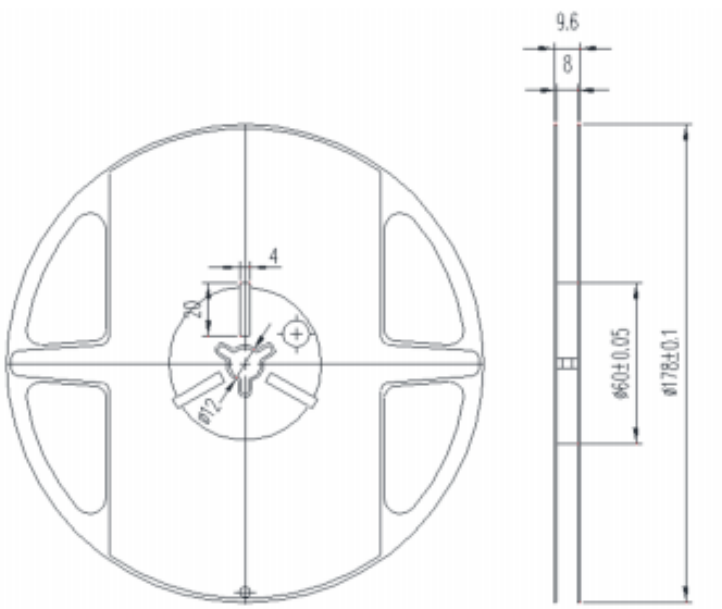


**Notes:**
**(1) Quantity : 4,000pcs/Reel**
**(2) Cumulative Tolerance : Cumulative Tolerance/10 pitches to be ±0.2mm**
**(3) Adhesion Strength of Cover Tape : Adhesion strength to be 0.1-0.7N when the cover tape is turned off from the**
**carrier tape at the angle of 10º to the carrier tape**
**(4) Package : P/N, Manufacturing data Code No. and quantity to be indicated on a damp proof Package.**

## PACKAGING

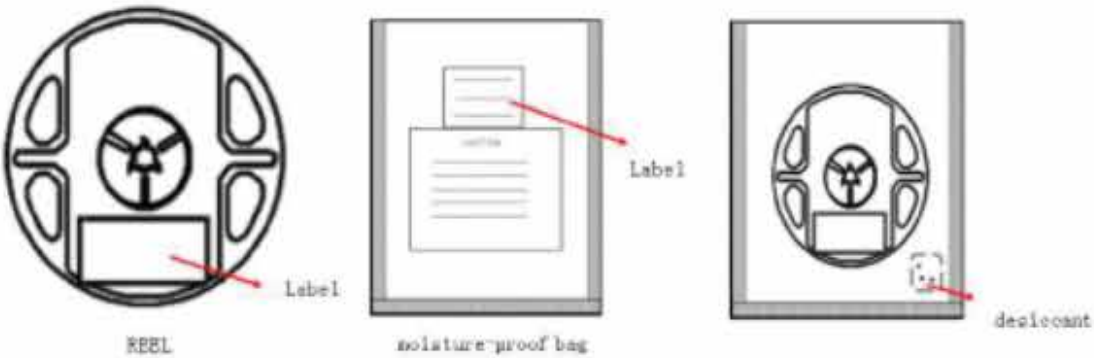


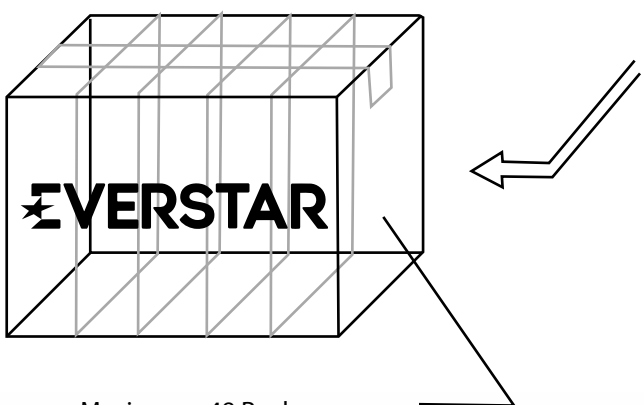


Maximums 48 Reels

## RELIABILITY TEST ITEMS

| Test Items | Test Duration | Number of Damaged |
|---|---|---|
| Steady State Operating Life of High Temperature (HTOL) Ts=85℃, IF=Max | 1000hrs | 0/20 |
| Steady State Operating Life of Low Temperature (LTOL) Ta=-40℃, IF=Max | 1000hrs | 0/20 |
| Pulse Wet Operating Life of High Temperature (PWHTOL) 60℃/90%RH, IF30mins ON/30min OFF | 500hrs | 0/20 |
| High Temperature Storage (HTS) ℃ 80℃ | 1000hrs | 0/20 |
| Low Temperature Storage (LTS) -40℃ | 1000hrs | 0/20 |
| Thermal Shock (TS) -45℃~125℃ 30min dwell 20sec transfer | 100cycles | 0/20 |
| Solder Resistance (SR) 265℃, 3X MSL | 5sec | 0/20 |
| Solder Ability (SA) 245℃5sec, 95% coverage | 5sec | 0/11 |
| Mechanical Shock (MS) 1500G 0.5msec pulse shock | Each6 axis | 0/6 |
| Random Vibration (RV) 6G RMS, 10-2000Hz, 10min | Per axis | 0/6 |
| Variable Vibration Frequency (VVF) 10-2000-10Hz, log or linear sweep rate, 20G for 1 min, 1.5mm each apply 3x per axis over | 6hrs | 0/6 |
| Salt Spread (SS) 35℃, 30g/m2/day | 48hrs | 0/11 |

| Item | Symbol | Test Condition | Criteria for Judgment Min. | Max. |
|---|---|---|---|---|
| Forward Voltage | $V_F$ | IF=Typical Current | | U.S.L x1.1 |
| Luminous Flux | Im | IF=Typical Current | L.S.L x0.7 | |
| CCX&CCY | x.y | IF=Typical Current | | Shift<0.02 |

## PRECAUTION FOR USE

(1) This device should not be used in any type of fluid such as water, oil, organic solvent, etc. When washing is required, IPA should be used.

(2) When the LEDs are illuminating, operating current should be decided after considering the ambient maximum temperature.

(3) LEDs must be stored to maintain a clean atmosphere. If the LEDs are stored for 3months or more after being shipped from Everstar, a sealed container with a nitrogen atmosphere should be used for storage.

(4) The LEDs must be used within seven days after opening the moisture proof packing. Repack unused Products with anti-moisture packing, fold to close any opening and then store in a dry place.

(5) The appearance and specifications of the product may be modified for improvement without notice.

(6) This LED is sensitive to the static electricity and surge. It is recommended to use a wrist Band or anti-electrostatic glove when handling the LEDs.

(7) On manual soldering, a solder tip must be needed as grounded for usage. If over voltage which exceeds the absolute maximum rating is applied to LEDs, it will cause damage LEDs and result in destruction. Damaged LEDs will show some unusual characteristics such as leak current remarkably increase, turn-on voltage becomes lower and the LEDs get unlighted at low current.