EVERSTAR

DATA SHEET

ES-2835-1072V-L1-G525

SPECIFICATION

Part No : ES-2835-1072V-L1-G525

Description : 2835 LED

Version No : V1.2/01.23

ES-2835-1072V-L1-G525 Datasheet

FEATURES

- External Dimensions：3.5*2.8*0.7(L*W*H)
- Internal Structure: Chip on Copper Board
- Viewing Angle:120°
- Chip Material :GaN
- RoHS Compliant

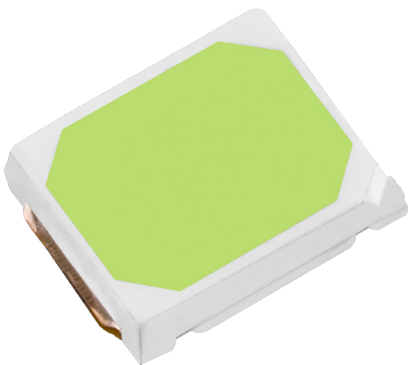

APPLICATION

- Down Light, Spot Light, High Bay Light, Flood Light, Outdoor Light

Package Dimensions

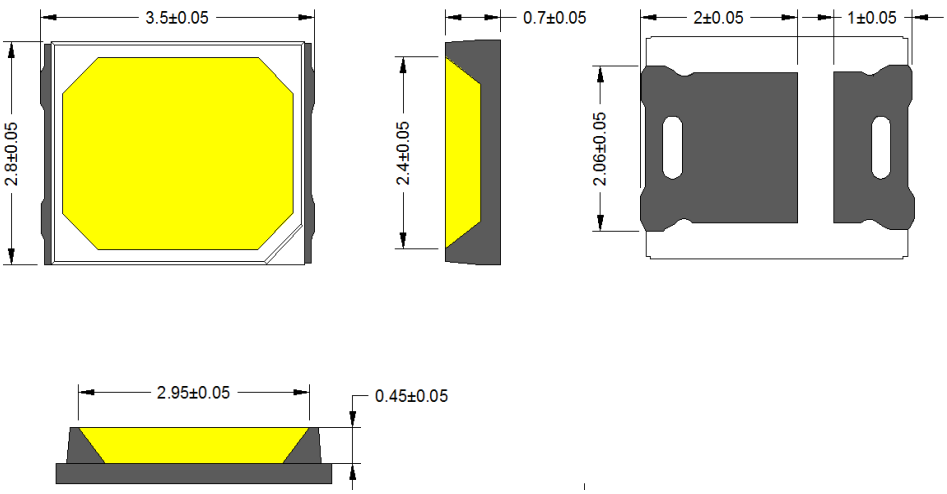

Notes:

1. All dimensions in millimeters.
2. Thickness tolerance of copper plate is ±0.02mm.
3. Thickness tolerance of product is ±0.05mm.
4. Tolerance is ±0.1mm unless otherwise noted.

ABSOLUTE MAXIMUM RATINGS

Item	Symbol	Rating	Unit
Forward current	I_F	15	mA
Peak Forward Current[1]	$I_{F(Peak)}$	18	mA
Storage Temperature	T_{stg}	-40~+105	℃
Operating Temperature	T_{opr}	-30~+105	℃
Soldering Temperature	T_s	/	℃
Junction Temperature	T_j	125	℃
ESD Sensitivity	ESD	2000V HBM	V
Lead Soldering Temperature	T_{SOL}	Max. 350℃ for 5 sec	℃

*1) These or any other conditions beyond those indicated under recommended operating conditions may cause permanent damages to the device .
*2) D. C. Current : Tj = Tc + Rth j-s × P ： Tj=Tc+ Rth j-s × P

CHARACTERISTICS (Tj=25°C)

Item	Symbol	WLD	Min	Avg	Max	Unit
Luminous Flux	Φv	525-535	55	~	65	LM
Forward Voltage	Vf	If=15mA	69	~	73	V
Color Rendering Index	Ra	If=15mA	/	--	--	--
Viewing Angle	2θ1/2	If=15mA	--	120	--	°
Thermal Resistance	Rth j-s		--	22	--	℃/W
Reverse Leakage Current	Ir	75V	/	/	5	μA

*These values are measured by the GS Everfine Hass2000 optical spectrum analyzer within the following tolerances: Hass2000
Luminous Flux (Φv) : ±5%, Forward Voltage (Vf) : ±0.1, X/Y : ±0.005, CRI Value : ±2
±5%, ±0.1, X/Y ： ±0.005, ±2

CREST DIAGRAM

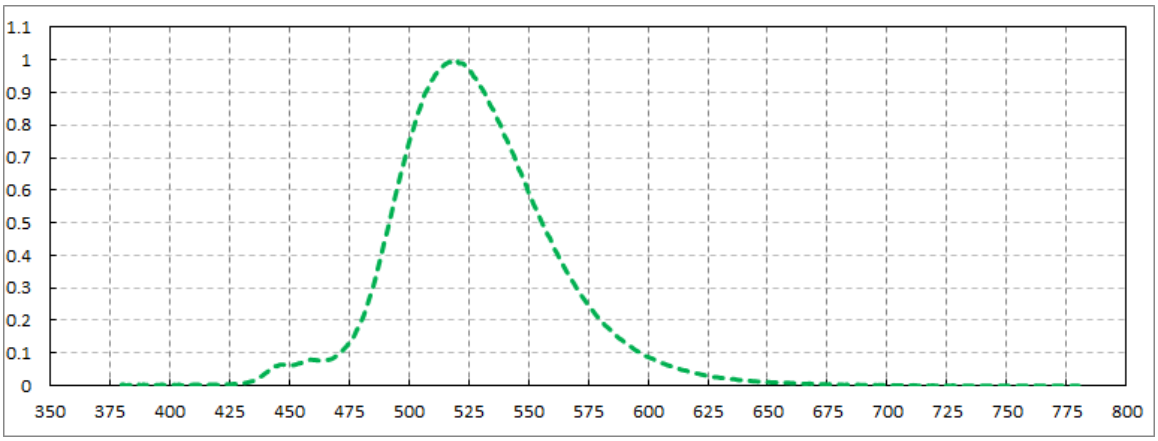

The above color temperature measurement allowance tolerance is ±150K

Typical Characteristic Curves

Forward Current Characteristics

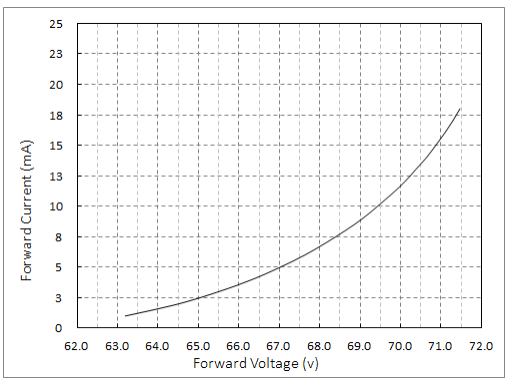

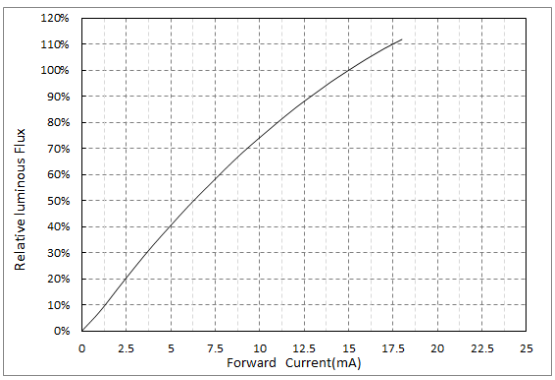

Temperature Characteristics

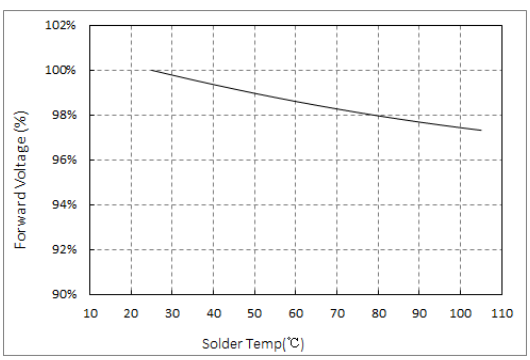

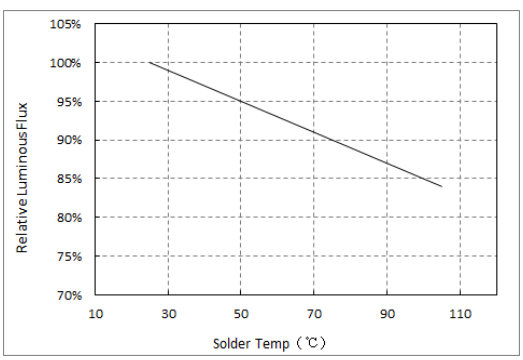

Derating Curve

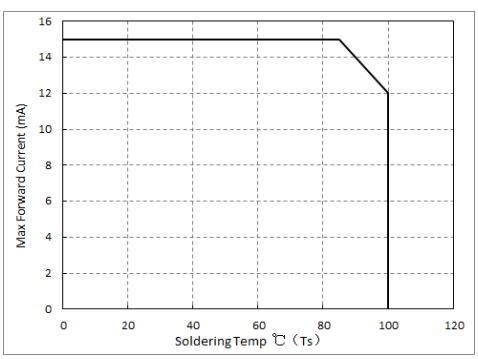

Max Driving Forward Current vs. Soldering Temp

Reliability Test Item and Conditions

Failure Criteria

Items	Symbols	Test Conditions	Min	Max
Forward Voltage	Vf	If=Typical Current	--	Initial Value*1.1
Luminous Flux	Φv	If=Typical Current	Initial Value*0.7	--

Reliability Test

Items	Test Condition	Test Hours/Cycles	Sample Size	Ac/Re
Room Temperature Operating Life	Ta=25°C If=Typical Current (DC)	1000hrs	22pcs	0/1
High Temperature Operating Life	Ta=85°C If=Typical Current (DC)	1000hrs	22pcs	0/1
Wet High Temperature Operating Life	Ta=85°C&85%RH If=Typical Current (DC)	168hrs	22pcs	0/1
Low Temperature Operating Life	Ta=-30°C	1000hrs	22pcs	0/1
High Temperature Storage Life	Ta=85°C	1000hrs	22pcs	0/1
Low Temperature Storage Life	Ta=-40°C	1000hrs	22pcs	0/1
Temperature Cycle	H:+100°C 30min~ 5min~L:-40°C 30min	200cycles	22pcs	0/1
Thermal Shock	H:+100°C 15min~ 10sec~L:-40°C 15min	200cycles	22pcs	0/1
Reflow Soldering	260°C 10sec	3cycles	22pcs	0/1

Packing Standard

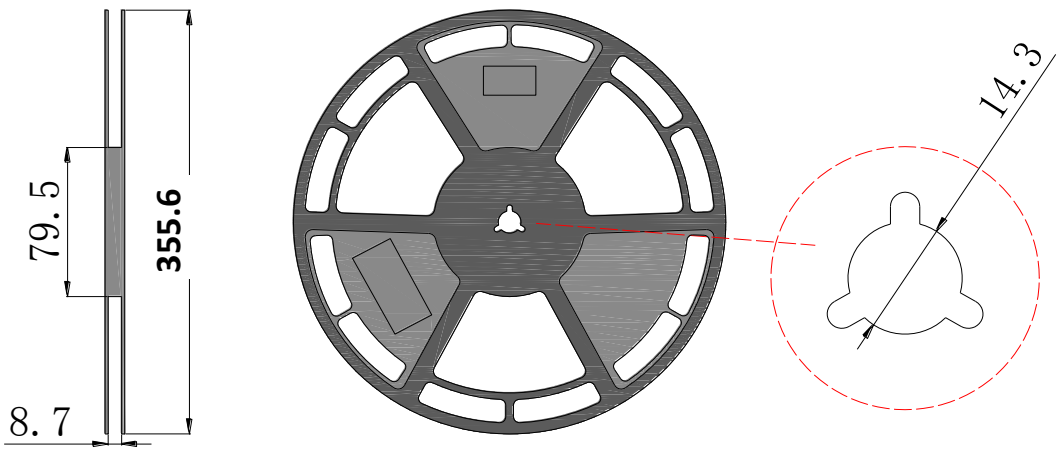

Reel

Tape

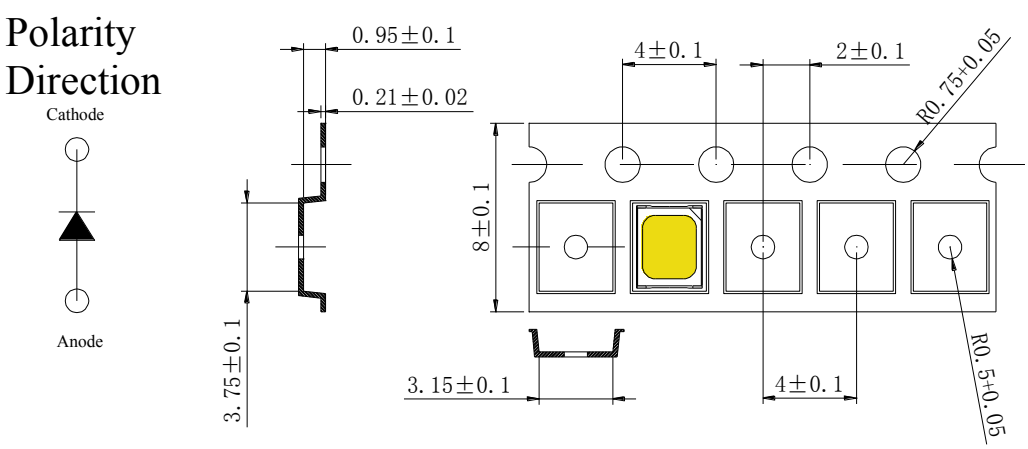

Remarks:
1. The material of the reel is PS (black), and the material of the cover tape is PET (transparent)
2. The unmarked tolerance is ±1.0;
3. When the products are out of the warehouse, they are packaged with carrier tapes, put into aluminum foil bags, and vacuum-sealed with desiccant. Each carrier is packed with LEDs. The number of lamp beads is 20,000 pcs. When using, please confirm that the aluminum foil bag is not leaking and the carrier tape is not cracked.

PRECAUTION FOR USE

(1) This device should not be used in any type of fluid such as water, oil, organic solvent, etc. When washing is required, IPA should be used.
(2) When the LEDs are illuminating, operating current should be decided after considering the ambient maximum temperature.
(3) LEDs must be stored to maintain a clean atmosphere. If the LEDs are stored for 3 months or more after being shipped from Everstar, a sealed container with a nitrogen atmosphere should be used for storage.
(4) The LEDs must be used within seven days after opening the moisture proof packing. Repack unused Products with anti-moisture packing, fold to close any opening and then store in a dry place.
(5) The appearance and specifications of the product may be modified for improvement without notice.
(6) This LED is sensitive to the static electricity and surge. It is recommended to use a wrist Band or anti-electrostatic glove when handling the LEDs.
(7) On manual soldering, a solder tip must be needed as grounded for usage. If over voltage which exceeds the absolute maximum rating is applied to LEDs, it will cause damage LEDs and result in destruction. Damaged LEDs will show some unusual characteristics such as leak current remarkably increase, turn-on voltage becomes lower and the LEDs get unlighted at low current.