EVERSTAR
The Brightest LED

DATASHEET

ES-2835-1036V-XX-XXXX

ES-2835-1036V-XX-XXXX Datasheet

This 2835 LED Light Source is a high performance energy efficient device which can handle high thermal and high driving current. The small package outline and high intensity make it an ideal choice for LED panel light, LED bulb light, LED tube light, backlighting and etc.

This part has a foot print that is compatible to most of the same size LED in the market today.

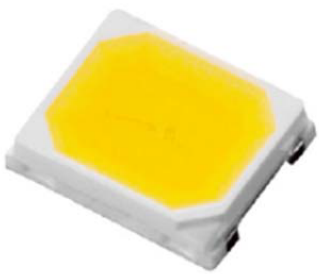

FEATURES

- Available in Cool White, Neutral White and Warm White color
- ANSI-compatible chromaticity bins
- High luminous Intensity and high efficiency
- Compatible with reflow soldering process
- Low thermal resistance
- Long operation life
- Wide viewing angle at 120°
- Silicone encapsulation
- Environmental friendly, RoHS compliance

APPLICATIONS

- Flat panel light
- Backlighting
- LED tube light
- LED bulb light
- Interior & exterior automotive lighting
- Decorative and landscape lighting
- Signage and channel letter
  Reading lamp
- Decorating and entertainment lighting
- Architectural lighting

Note:
The information in this document is subject to change without notice.

PACKAGE DIMENSIONS

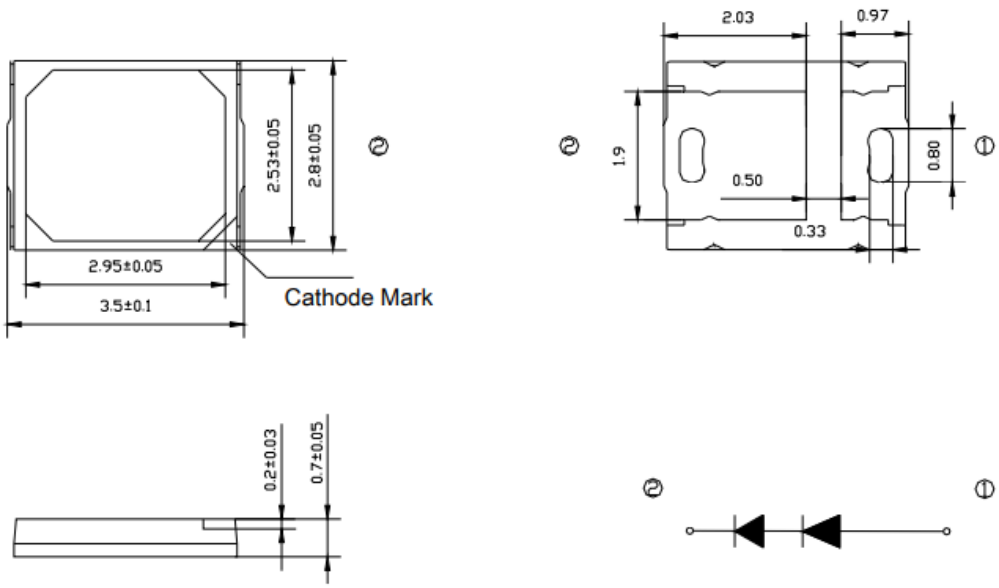

Recommended Solder Pad Design

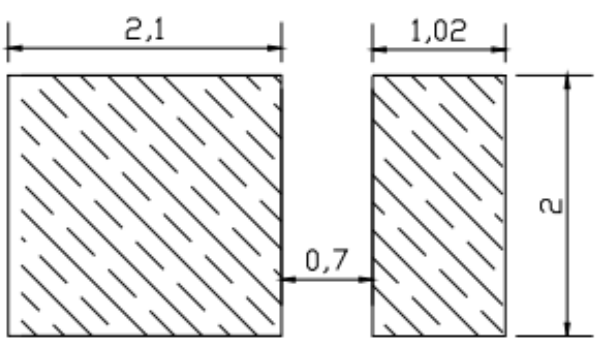

Notes:

1. All dimensions in millimeters.
2. Thickness tolerance of copper plate is ±0.02mm.
3. Thickness tolerance of product is ±0.05mm.
4. Tolerance is ±0.1mm unless otherwise noted.

ABSOLUTE MAXIMUM RATINGS (Ta=25℃)

Parameter	Symbol	Value	Unit
Forward current	I_F	30	mA
Peak Forward Current	I_{FP}	50	mA
Reverse Voltage	V_R	40	V
Power Dissipation	P_d	1080	mW
Operating Temperature	T_{opr}	-40~+85	℃
Storage Temperature	T_{stg}	-40~+100	℃
Soldering Temperature	T_{sld}	Reflow Soldering: 260°C for 10 seconds	
LED Junction Temperature	Tj	115	℃

I_{FP} Conditions: Pulse Width ≤10msec. and Duty ≤1/10.

CHARACTERISTICS (Ta=25℃)

Parameter	Symbol	Condition	Min.	Typ.	Max.	Unit
Forward Voltage	V_F	I_F=30mA	34	--	39	V
Viewing Angle	$2\theta_{1/2}$	I_F=30mA	--	120	--	deg.
Luminous Flux	Φv	I_F=30mA	130	--	155	lm
Color Temperature	CCT	I_F=30mA	2600	--	7000	K
Color Rendering Index	CRI	I_F=30mA	80	--	--	--
Thermal Resistance (Junction to Solder Point)	R_{th-js}	I_F=30mA	--	15	--	°C/W

Note:
1. Luminous flux is measured with an accuracy of ± 10%.
2. Chromaticity coordinate bins are measured with an accuracy of ± 0.01.
3. CRI is measured with an accuracy of ± 2.
5. All measurements were made under the standardized environment of Everstar

RELATIVE SPECTRAL POWER DISTRIBUTION (Tj=25℃)

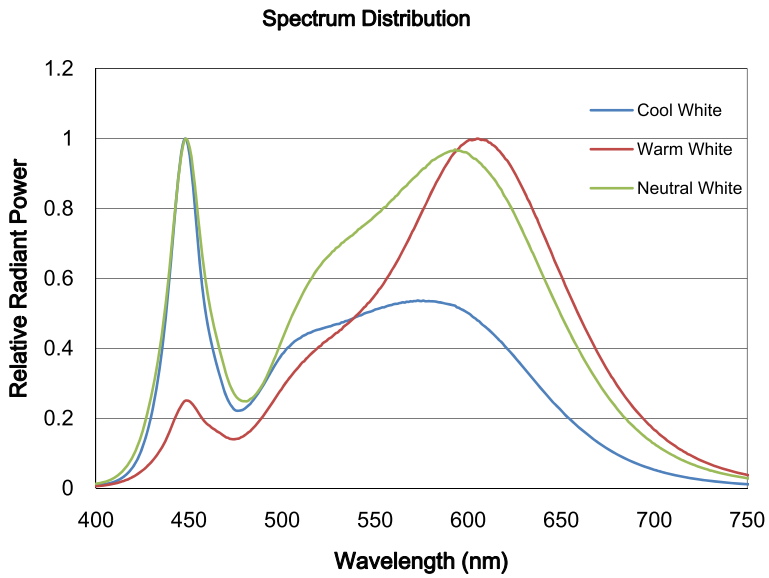

TYPICAL SPATIAL DISTRIBUTION

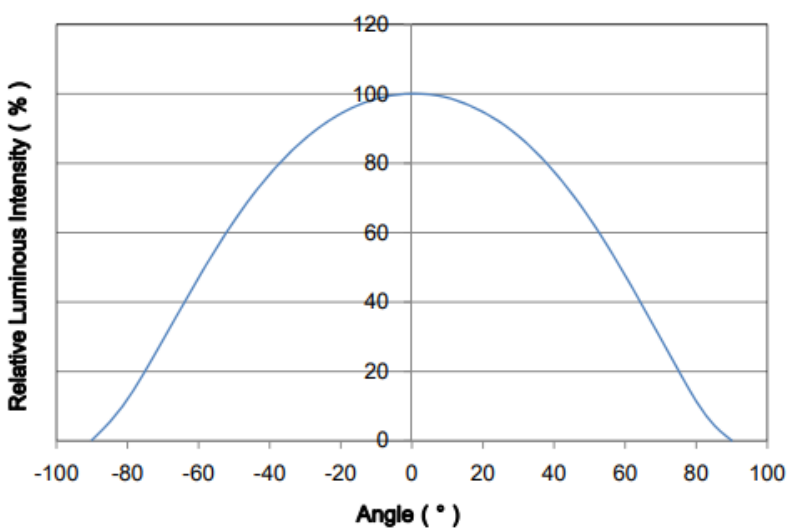

RELATIVE LUMINOUS FLUX VS. CURRENT (Tj=25℃)

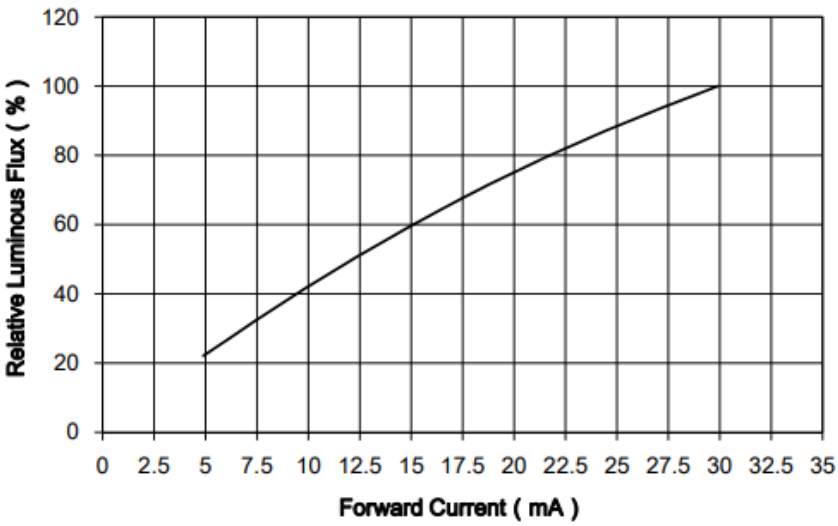

ELECTRICAL CHARACTERISTICS (Tj=25℃)

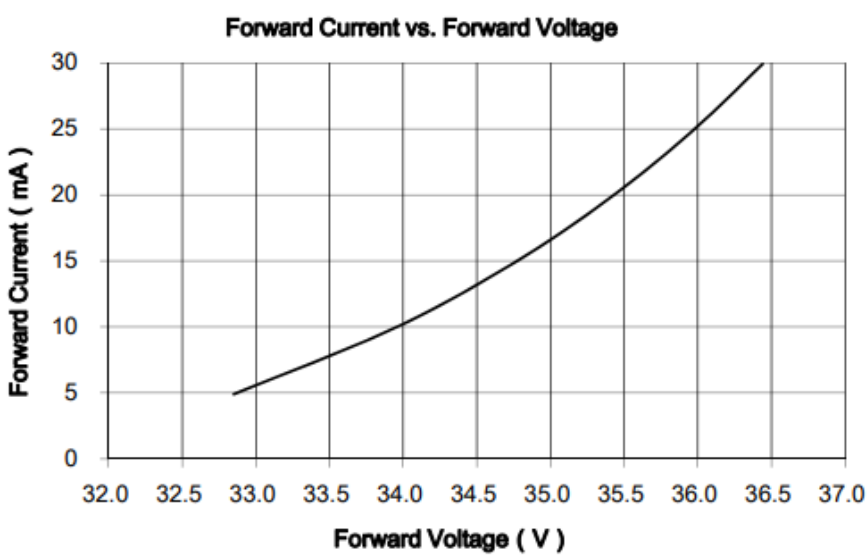

MAXIUM CURRENT VS. AMBIENT TEMPERATURE

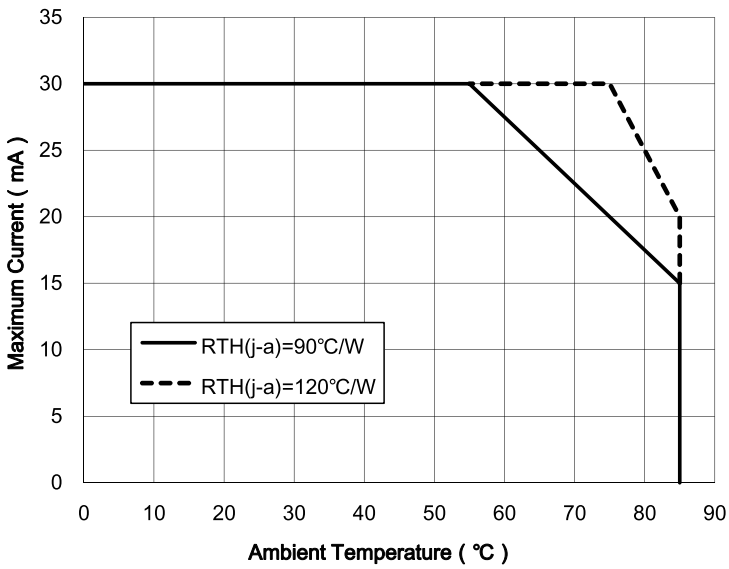

RELATIVE RADIANT FLUX VS. JUNCTION TEMPERATURE

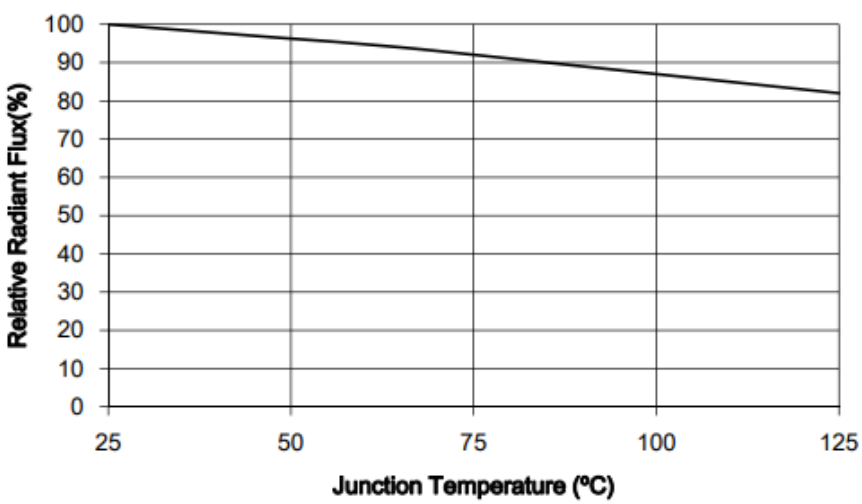

SORTING RANKS

(1) Luminous Intensity (Tj=25℃)

Part No.	Condition	Rank	Unit
ES-2835-1036V-XX-830	30mA	L1 135-145	Im
ES-2835-1036V-XX-840		L1 145-155	
ES-2835-1036V-XX-850		L1 145-155	
ES-2835-1036V-XX-857		L1 145-155	
ES-2835-1036V-XX-865		L1 135-145	

(2) Forward Voltage (Tj=25℃)

Rank	Condition	Min.	Max.	Unit
V1	30mA	34	36	V
V2		36	38	

Note:
1. 10% tolerance for luminous intensity may be caused by measurement inaccuracy.
2. Measurement Uncertainty of the Forward Voltage : ± 3%

(3) Chromaticity Bins

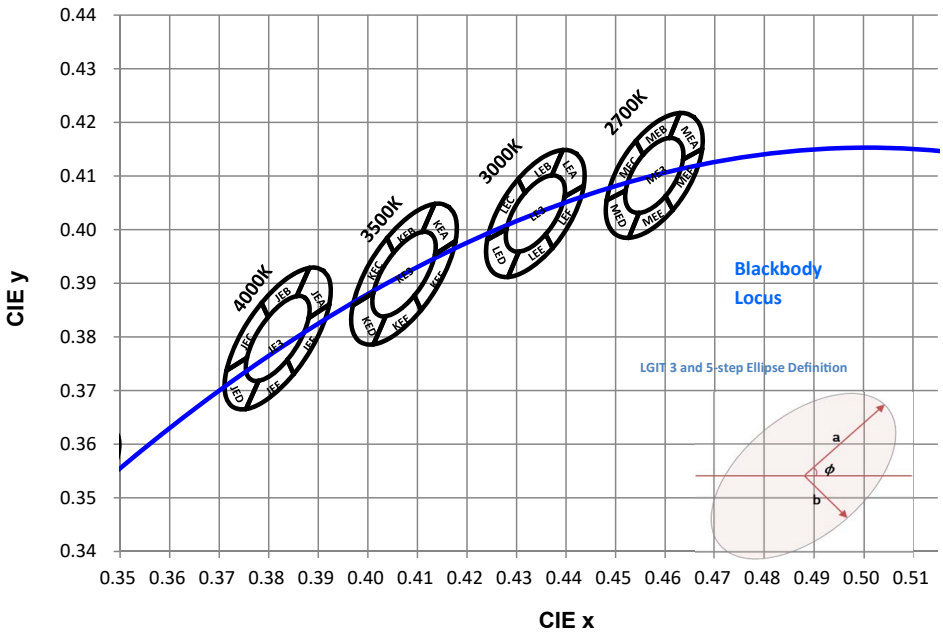

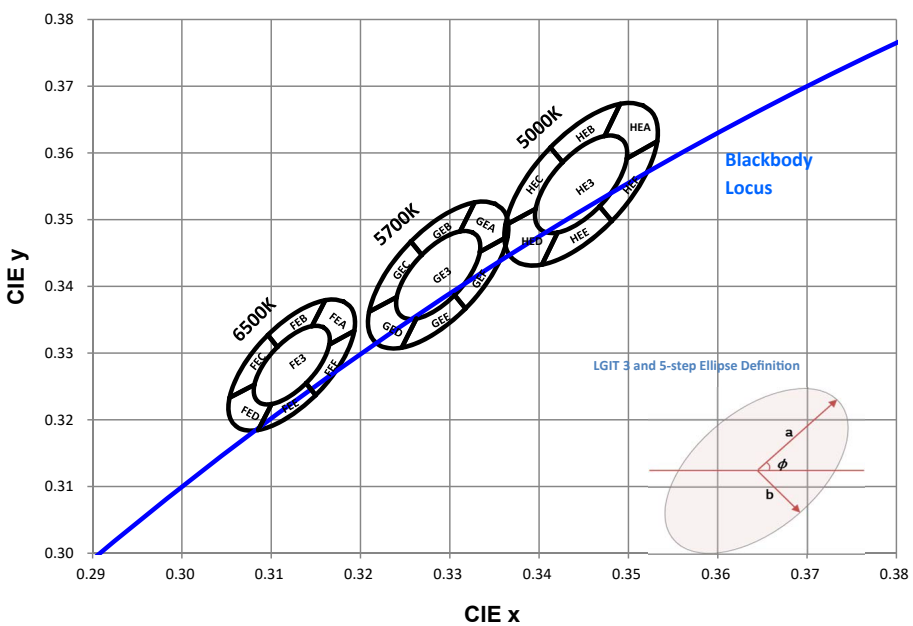

REFLOW SOLDERING CHARACTERISTICS

For Reflow Process

Preheating : 140°C~160°C±5°C,within 2 minutes.

Operation heating : 260°C(Max.) within 10 seconds.(Max)

Gradual Cooling (Avoid quenching).

Lead solder		Lead-free solder	
Pre-heat	120-150℃	Pre-heat	150-200℃
Pre-heat time	120 sec.Max.	Pre-heat time	120 sec.Max.
Peak Temperature	240℃ Max.	Peak Temperature	260℃ Max.
Soldering time condition	10 sec.Max.	Soldering time condition	10 sec.Max.

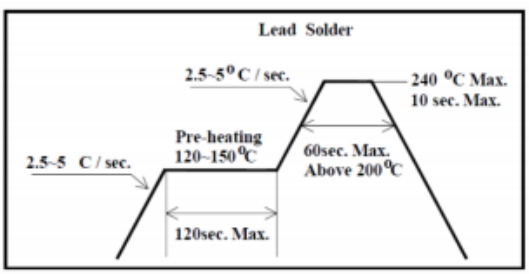

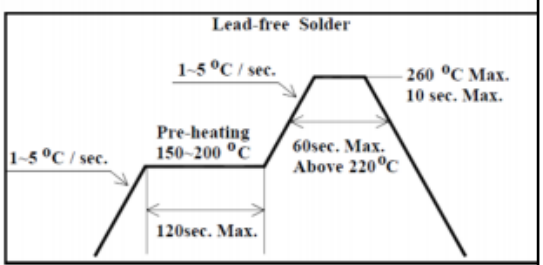

Note:
The encapsulated material of the LEDs is silicone . Therefore the LEDs have a soft surface on the top of package. The pressure to the top surface will be influence to the reliability of the LEDs. Precautions should be taken to avoid the strong pressure on the encapsulated part. So when using the picking up nozzle, the pressure on the silicone resin should be proper.

TAPE AND REEL

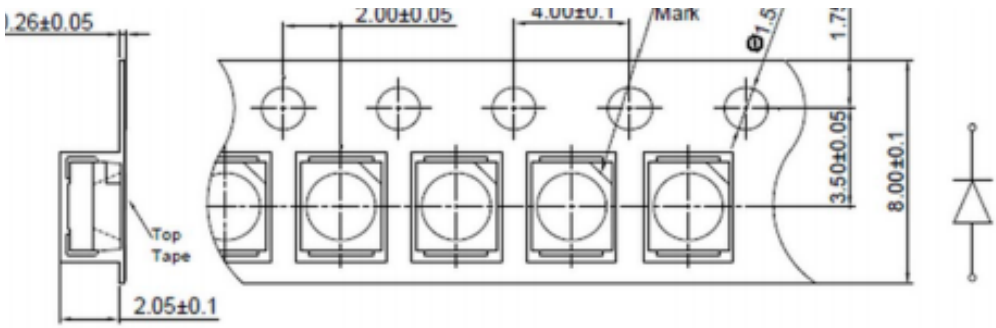

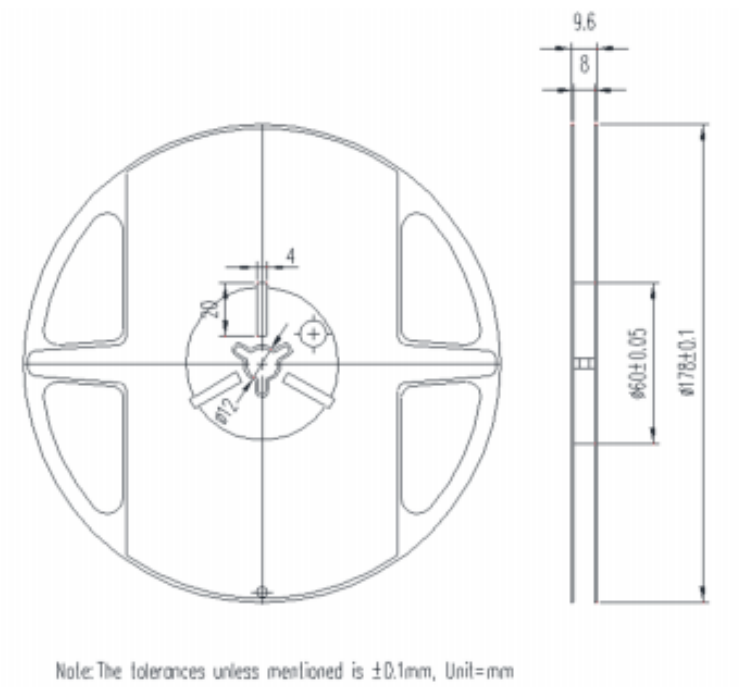

Notes:
(1) Quantity : 4,000pcs/Reel
(2) Cumulative Tolerance : Cumulative Tolerance/10 pitches to be ±0.2mm
(3) Adhesion Strength of Cover Tape : Adhesion strength to be 0.1-0.7N when the cover tape is turned off from the carrier tape at the angle of 10º to the carrier tape
(4) Package : P/N, Manufacturing data Code No. and quantity to be indicated on a damp proof Package.

PACKAGING

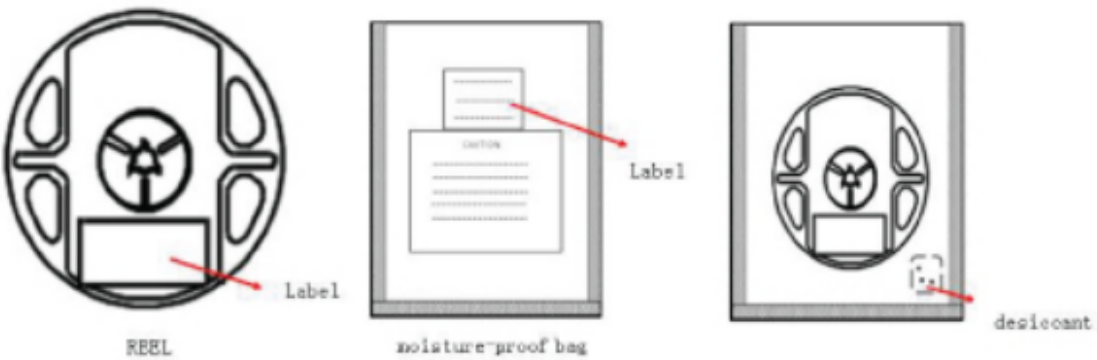

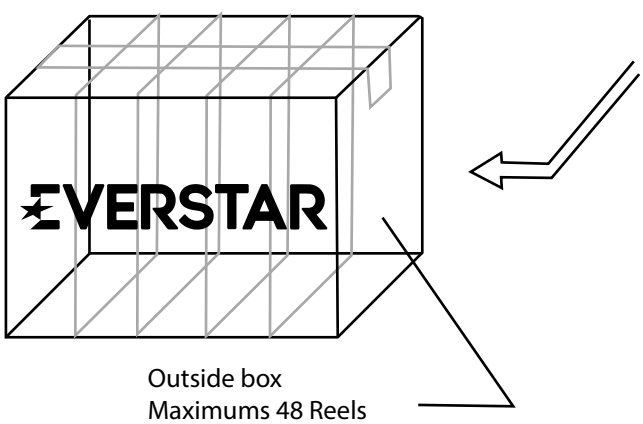

Outside box
Maximums 48 Reels

RELIABILITY TEST ITEMS

Test Items	Test Duration	Number of Damaged
Steady State Operating Life of High Temperature (HTOL) Ts=85℃, IF=Max	1000hrs	0/20
Steady State Operating Life of Low Temperature (LTOL) Ta=-40℃, IF=Max	1000hrs	0/20
Pulse Wet Operating Life of High Temperature (PWHTOL) 60℃/90%RH, IF30mins ON/30min OFF	500hrs	0/20
High Temperature Storage (HTS) ℃ 80℃	1000hrs	0/20
Low Temperature Storage (LTS) -40℃	1000hrs	0/20
Thermal Shock (TS) -45℃~125℃ 30min dwell 20sec transfer	100cycles	0/20
Solder Resistance (SR) 265℃, 3X MSL	5sec	0/20
Solder Ability (SA) 245℃5sec, 95% coverage	5sec	0/11
Mechanical Shock (MS) 1500G 0.5msec pulse shock	Each6 axis	0/6
Random Vibration (RV) 6G RMS, 10-2000Hz, 10min	Per axis	0/6
Variable Vibration Frequency (VVF) 10-2000-10Hz, log or linear sweep rate, 20G for 1 min, 1.5mm each apply 3x per axis over	6hrs	0/6
Salt Spread (SS) 35℃, 30g/m2/day	48hrs	0/11

Item	Symbol	Test Condition	Criteria for Judgment Min.	Max.
Forward	VF	IF=Typical Current		U.S.L x1.1
Luminous Flux	Im	IF=Typical Current	L.S.L x0.7	
CCX&CCY	x.y	IF=Typical Current		Shift<0.02

PRECAUTION FOR USE

(1) This device should not be used in any type of fluid such as water, oil, organic solvent, etc. When washing is required, IPA should be used.

(2) When the LEDs are illuminating, operating current should be decided after considering the ambient maximum temperature.

(3) LEDs must be stored to maintain a clean atmosphere. If the LEDs are stored for 3months or more after being shipped from Everstar, a sealed container with a nitrogen atmosphere should be used for storage.

(4) The LEDs must be used within seven days after opening the moisture proof packing. Repack unused Products with anti-moisture packing, fold to close any opening and then store in a dry place.

(5) The appearance and specifications of the product may be modified for improvement without notice.

(6) This LED is sensitive to the static electricity and surge. It is recommended to use a wrist Band or anti-electrostatic glove when handling the LEDs.

(7) On manual soldering, a solder tip must be needed as grounded for usage. If over voltage which exceeds the absolute maximum rating is applied to LEDs, it will cause damage LEDs and result in destruction. Damaged LEDs will show some unusual characteristics such as leak current remarkably increase, turn-on voltage becomes lower and the LEDs get unlighted at low current.